INDEX

INTRODUCTION

PERFORMANCE THROUGH REVOLUTION

Dynamatic has a complete range of gear pumps for both mobile and industrial market segments. Dynamatic developed these pumps in technical collaboration with DOWTY Hydraulic units Limited, U.K.

In the past 4 decades, Dynamatic R&D has developed many variants suitable for the industry.

Complete Range

Dynamatic gear pumps are available in four frame sizes giving displacements from 1.23 cc / rev. to 151.0 cc/ rev. Pumps are also available in Tandem Configurations and the company specializes in supplying units to special order instructions (subject to quantity) including multiple section pumps.

High Efficiency

High volumetric efficiency produced by Dynamatic pumps are achieved in part by careful attention to the control of gear tip leakage. The body to gear geometry is arranged such that during the running-in test cycle, to which every unit is subjected, the gears cut perceptible tracks in the body. These results in virtually zero clearance between the gear tips and body producing a near perfect tip seal under running conditions.

Floating composite bushes are used in Dynamatic pumps, which house the bearing liners and provide a face seal to the gears. This efficient seal is achieved by pressure loading precise areas of the bush rear face with fluid at working pressure. Special features are incorporated in the bush sealing face to compensate for operating variables such as pressure, speed and temperature. The Dynamatic pressure balancing system ensures a minimum net load on the bush bearings for high mechanical efficiency, while at the same time varying the pressure distribution across the bush faces with the change in system pressure, thus contributing to high volumetric performance.

Performance

DU lined / bimetal bearings are used to sustain high journal loads when operating at 210 Kg/cm2 and speed upto 3500 RPM. Dynamatic has developed special journal surface finishes and treatment, to obtain maximum benefits from these bearing configurations. Low pressure bearing lubrication is a feature of all Dynamatic Pumps. This is achieved by utilising the expression generated when the gear teeth separate to draw lubricating fluid from the inlet port and along each bearing journal by way of passage in the composite bush. This proven system ensures efficient cooling and lubrication of the bearings with a constant supply of fluid, independent of operating conditions.

Durability

High tensile aluminum alloy bodies are used throughout the range to ensure uniformity in material properties and maximum fatigue strength. Through – body bores enable precise alignment of the bearings and hence maximum bearing load capacity. Careful attention to machining details and surface finishes, holds wear rates to a minimum and promotes an extended operating life.

Dynamatic Pumps have been designed to perform with a wide range of fluids and can be supplied with either Nitrile or Viton seals as standard.

APPLICATION DATA

Drives

Use of flexible coupling is recommended to accommodate any slight misalignment of shaft and to dampen vibration.

The user should work closely with the coupling manufacturer in selecting and applying a suitable coupling. Drives should be arranged so that the shaft is protected from all axial and radial loads. The coupling should allow a minimum of 0.25mm radial movement and should impose little or no end load. Splines must allow sufficient radial movement.

A large angle between the drive and connecting shafts should be avoided (100 max.). Splined shaft units may be plugged directly into a rigidly supported mating part, only if the concentricity between the female spline and pilot diameter is better than 0.12mm T.I.R. In case where manufacturing tolerances exceed this figure, the application should be referred to our Technical Sales Department. When flexible couplings, gears, Vee or toothed timing belts are to be used, the coupling half, gear or pulley, should be secured to the drive shaft.

If this is not possible, continuous lubrication to the shaft must be provided to maintain maximum life. This can be done by flooded lubrication, oil mist lubrication or by applying a molybdenum disulfide based grease during initial assembly. Side loads by indirect drives can be accommodated, but allowances must be made for the extra side load that these drives impose on the pump bearings. In general larger the gear, sprocket, or pulley diameter and the closer this is to the pump-mounting flange, lesser the load on the bearings. However, the loading must be carefully calculated and should be referred to our Technical sales Department. Both parallel and taper shaft units are supplied with a shaft key. The parallel shaft keys must be hand-fitted when the coupling is assembled. On no account must the key or coupling be fitted, or removed by hammering or levering. This will damage the pump internally.

Mounting

The pump may be mounted in any position. The units are supplied with a wide variety of mounting flanges, having a spigot for location. The fixture that receives the mounting flange spigot should have 1mm x 450 chamfer to ensure proper installation. To minimize vibration, which can be transmitted to the pump by rigid pipe runs, it is good practice to use flexible hose immediately connected to the unit ports.

Rotation

Shaft rotation is denoted in the unit coding. Inlet and Rotation arrows are stamped on the unit body. Direction of rotation is as viewed from the drive shaft end (see coding chart). Pump Suction Line The suction line must be as large as possible and should be free from sharp bends to prevent excessive suction head, which should in no case exceed 190 mm of mercury (0.24 bar) below atmospheric pressures. The system should be designed to prevent entry of air and a positive head of oil should be maintained wherever possible. Lower pressures during cold start-up conditions are permissible for short periods.

As a general guide, fluid velocity in the pump suction line should not exceed 1 m/sec for pipe lengths upto 1.5 meters. If longer suction runs or higher velocities are contemplated, contact Dynamatic before use.

Oil Reservoir

As a general rule of thumb, the reservoir capacity for industrial applications should be three to five times the pump flow per minute being drawn from the reservoir. For mobile applications, the reservoir should be sized for not less than 1.5 times the pump flow (of course, the volume for rams and actuators must be allowed for by providing adequate air space and breathing).

The pump suction line should draw oil from a point not less than 100 mm above the tank bottom to avoid sludge deposits from entering the pump. The return line should be submerged to limit frothing of oil. The suction and return connections should be positioned as far apart as possible and separated by baffles, so that oil circulation is promoted within the tank to assist convection cooling and allow air entrained in the oil to dissipate.

Filtration

The fluid should be filtered during top-up and continuously during operation, to achieve and maintain a cleanliness level of ISO 17/14.

This recommendation should be considered a minimum. Better cleanliness levels will significantly increase component life.

Fluids

Most premium grade mineral oil based hydraulic fluids are suitable for use with Dynamatic Gear Pumps. A primary consideration in the selection of Hydraulic Fluid is expected oil temperature extremes that will be experienced in service. When choosing the hydraulic fluid, these temperature extremes must be considered to obtain the most suitable temperature viscosity characteristics. For optimum performance, the viscosity should be maintained in the 97 - 456 SUS (20 - 100 CST) range.

Operating Temperature Range

The pumps are designed to operate between 0°C and 90°C intermittent temperatures may vary between –20°C to 100°C if the fluid being pumped is suitable for such operations. For higher temperature applications, contact Dynamatic for more details, before use.

Pump Drives

1. Direct Drives

Drive to the pump shaft must be arranged so that the shaft is relieved of all side and end loads. A flexible coupling should be selected to allow a minimum of 0.010" (0.25 mm) radial displacement and should impose little or no end load on the pump shaft. (Not all 'flexible 'couplings, especially of the bonded rubber types, allow complete radial or axial freedom and should only be used if alignment is good). The table below gives the approved types of drive.

Approved Drives (basic pumps):

- UCC coupling (Crowned tooth gear couplings)
- Renold Chain Coupling
- Quill shaft (The spline must allow sufficient radial movement)
- Turboflex & Hardy Spicer (Must use two couplings to provide radial alignments)

Note: Both Hardy Spicer joints must be fitted such that the pump shaft rotates uniformly and large angles should be avoided on the connecting shaft. Hardy Spicer type drives often incorporates splined connections to accommodate plunge motions. Under torque these splines tend to lock up and many

transmit intermittent end loads on the pump shaft if the prime mover can move relative to the pump.

Pumps equipped with splined or serrated shafts and occasionally parallel-keyed shafts, invite mis-application by plugging the pump shaft directly into the rigidly supported mating shaft of a prime mover.

This practice should be avoided as far as possible since very high side loads can be imposed on the pump by the mating splines acting as an internal/ external gear unless the concentricity of the driving and driven shafts, when under load, is of a very high order.

As a general recommendation provided the concentricity of the female drive spline or serration is within 0.005 ins (0.13 mm) T.I.R. of the female location spigot, the plug in drive arrangement will be acceptable. Where plug in drives are to be used detail drawings of the components in the drive train should be submitted to our Technical Sales Department for approval, before use.

2. Indirect Drives

Generally, with any indirect side drive, the gear, sprocket or pulley diameter should be as large as possible and installed as close as possible to the pump mounting flange to minimize the side loads imposed on the pump shaft and bearings.

Chain, toothed, belt, V Belt or gear drives can be accommodated but allowance must be made for the extra load these drives apply to the pump bearings.

'V' belt drives require static belt tension, which produces poor bearing alignment. The static tension which is dependent upon maximum pump pressure and speed, and can generally only be set approximately, cause the drive shaft to be tilted across the running clearance of the front and rear bearings when operating at low pressures. The shaft will only run with correct alignment when the moments due to the hydraulic loads are greater than those due to the belt tension.

With all indirect drives, whether gear, chain or belt, their suitability can be established by calculation of the loads imposed on the drive shaft. Other variables such as pump size, operating pressure and drive attitude have an influence on bearing loads therefore in all cases where these types of drives are contemplated please consult our Technical Sales Department giving full application details, before use.

PREFERRED DIRECTION OF LOADING AT PUMP DRIVE SHAFT

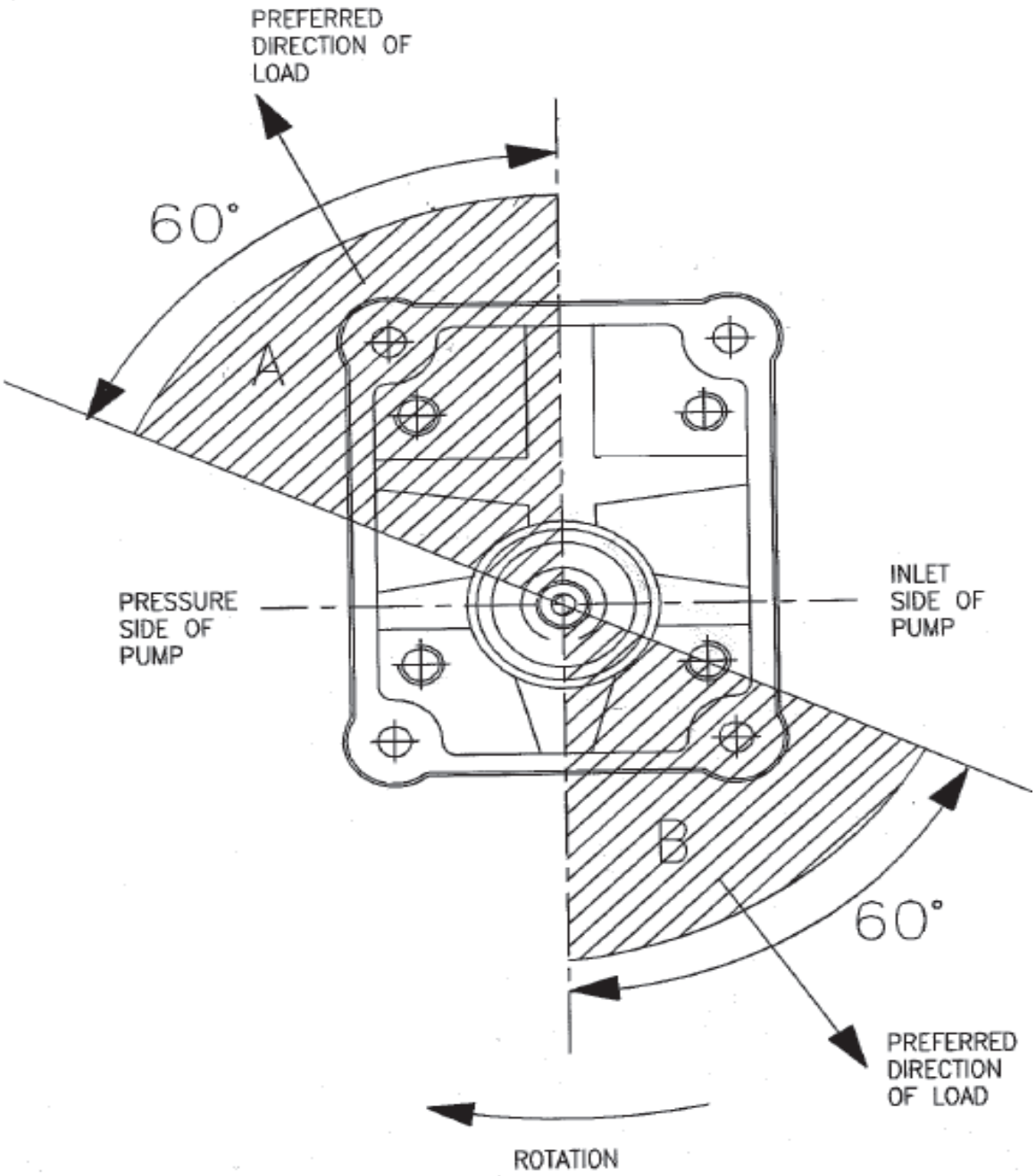

GEAR PUMP

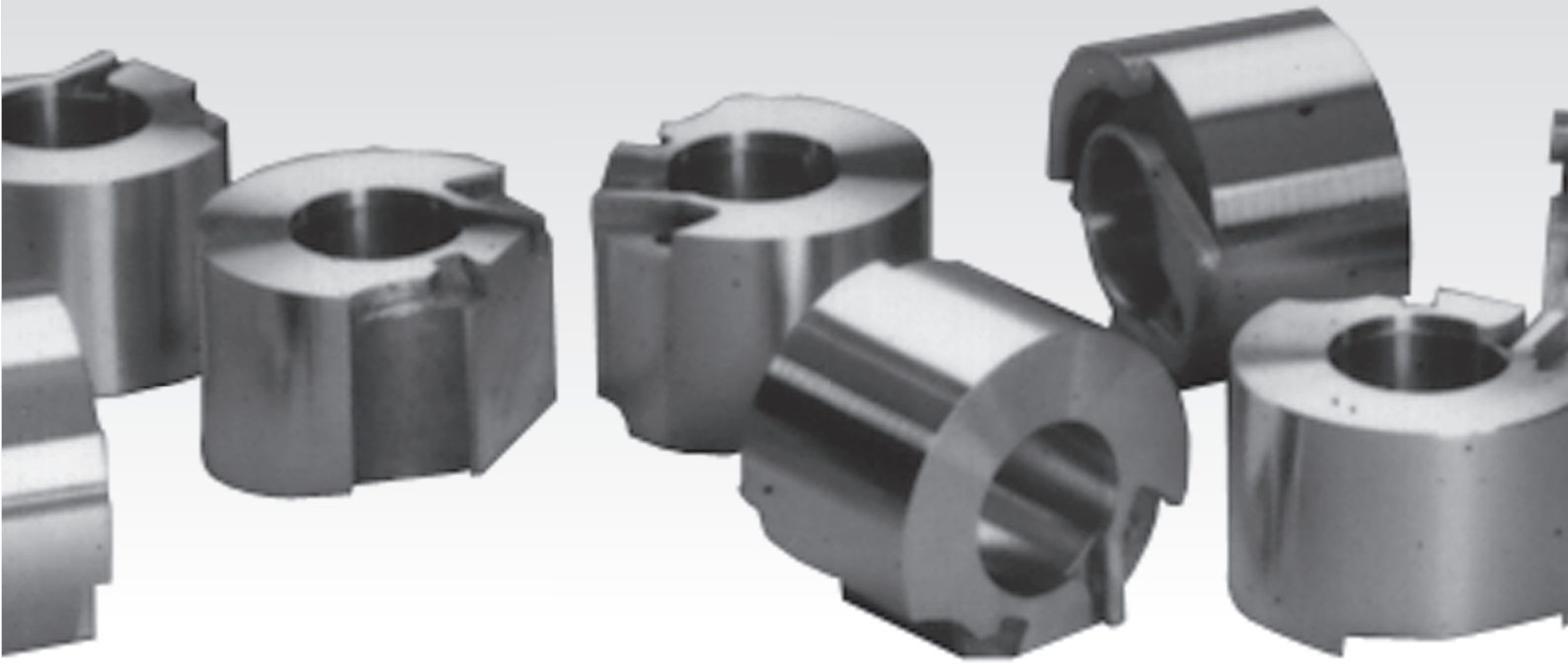

SINGLE PUMP

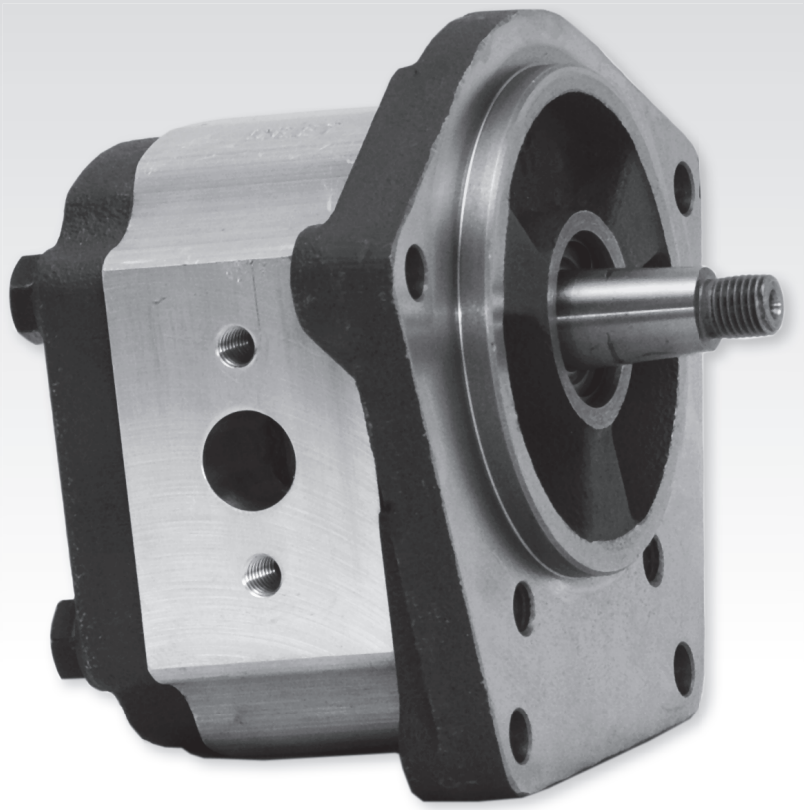

PERFORMANCE DATA

Pressures quoted are relief valve maximum by-pass
Performance with SAE 20W oil at 50˚C

PUMP TYPE	DISPLACEMENT	DELIVERY @1500 RPM & PRESSURE P		MAXIMUM CONTINUOUS PRESSURE P		SPEED AT MAXIMUM CONTINUOUS PRESSURE P	
	cc/rev	MIN lpm	MAX lpm	psi	bar	MAX	MIN
3003	1.27	1.0	1.9	3000	207	4000	700
3004	1.67	1.6	2.5	3000	207	4000	700
3006	2.2	2.3	3.3	3000	207	4000	700
3008	2.87	3.2	4.3	3000	207	4000	700
3011	3.8	4.5	5.7	3000	207	4000	700
3013	4.47	5.5	6.7	3000	207	4000	700
3015	5.13	6.4	7.7	3000	207	4000	700

TYPICAL PERFORMANCE

TYPICAL PUMP DELIVERY
Flow at Max. Pressure

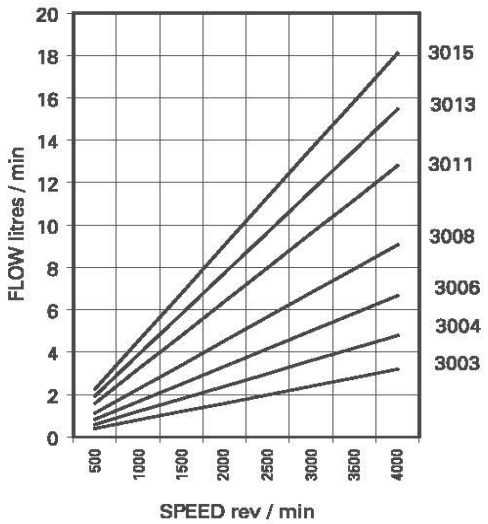

TYPICAL INPUT HORSEPOWER
Fluid SAE 20W
Fluid Temperature 50˚C

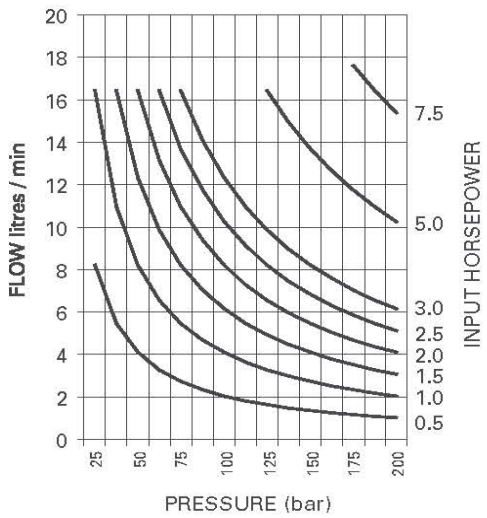

INSTALLATION DIMENSIONS - 0P SERIES

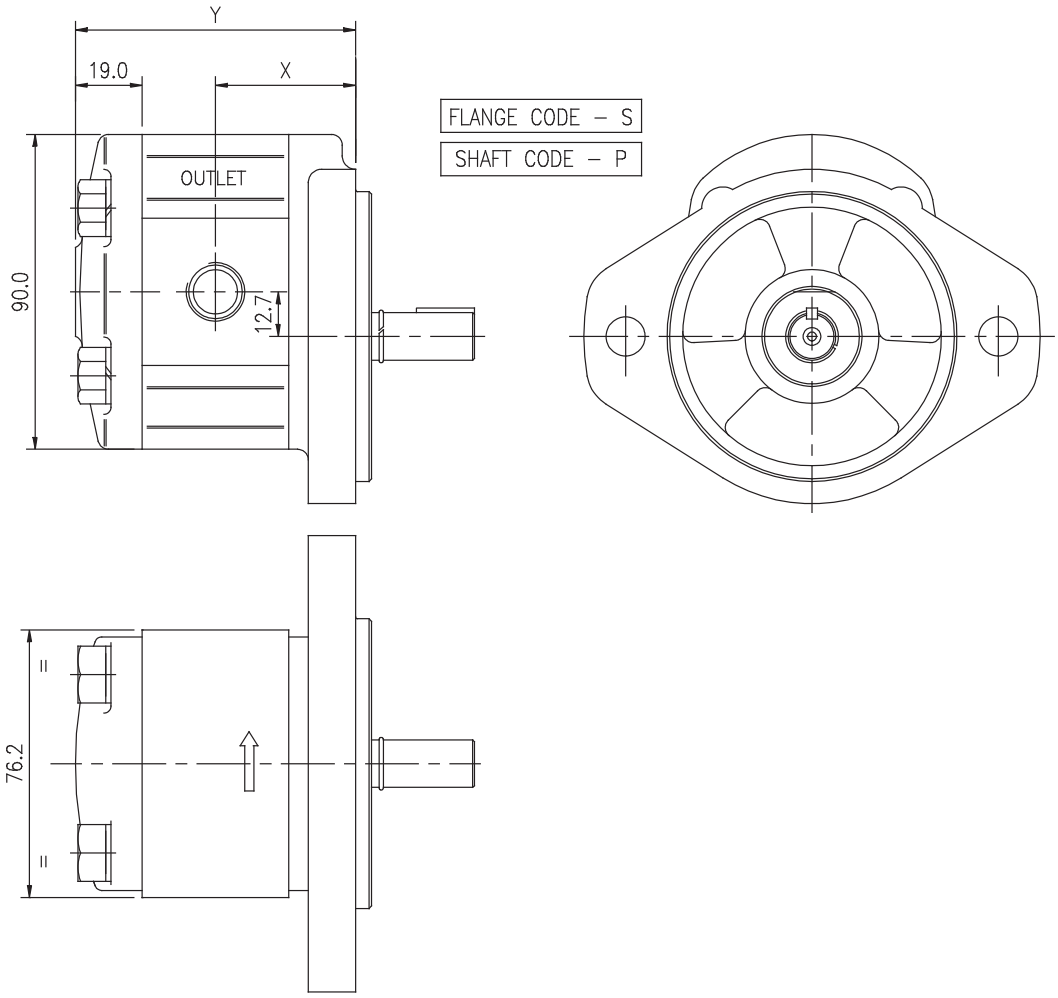

PUMP TYPE	DIMENSIONS	
	X	Y
0P-3003	38.1	76.3
0P-3004	38.6	77.1
0P-3006	39.1	78.2
0P-3008	39.9	79.7
0P-3011	40.9	81.7
0P-3013	41.5	83.1
0P-3015	42.3	84.5

NOTE:

- The representation for the pump assembly drawing is for clockwise direction of shaft rotation as viewed from pump drive shaft end. For anti-clockwise rotation of pump shaft, the position of inlet & outlet ports will interchange.
- Unless otherwise specified, the dimension 'X' is identical for both inlet & outlet port positions

ALL DIMENSIONS ARE IN mm UNLESS OTHERWISE SPECIFIED

DRIVE SHAFT CODE - L
FLANGE CODE - S

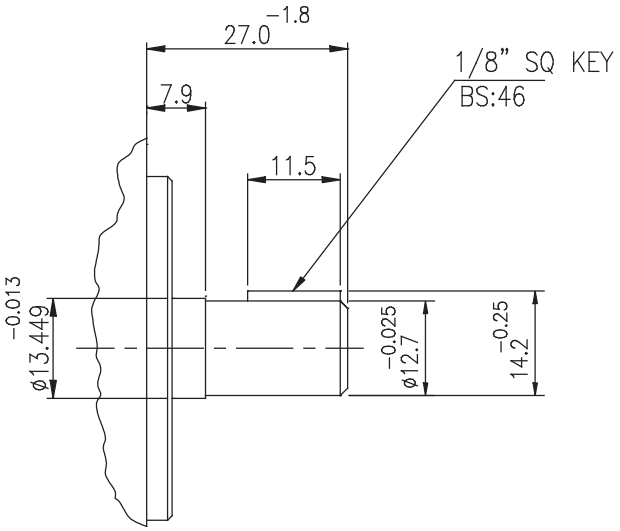

DRIVE SHAFT CODE - L
FLANGE CODE - D

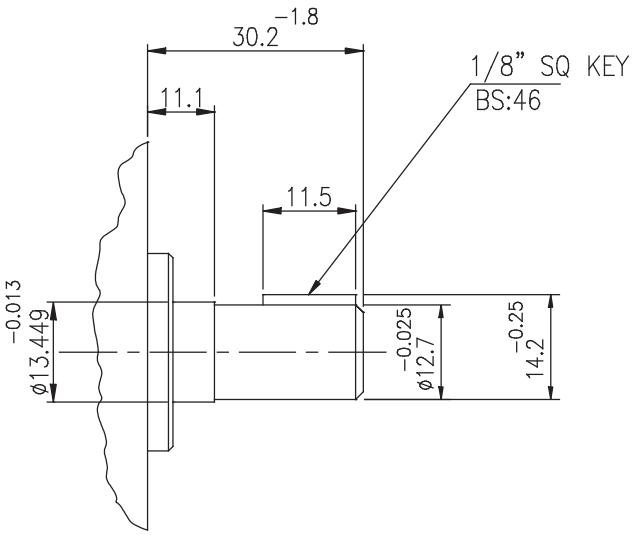

ALL DIMENSIONS ARE IN mm UNLESS OTHERWISE SPECIFIED

DRIVE SHAFT CODE - T
FLANGE CODE - S

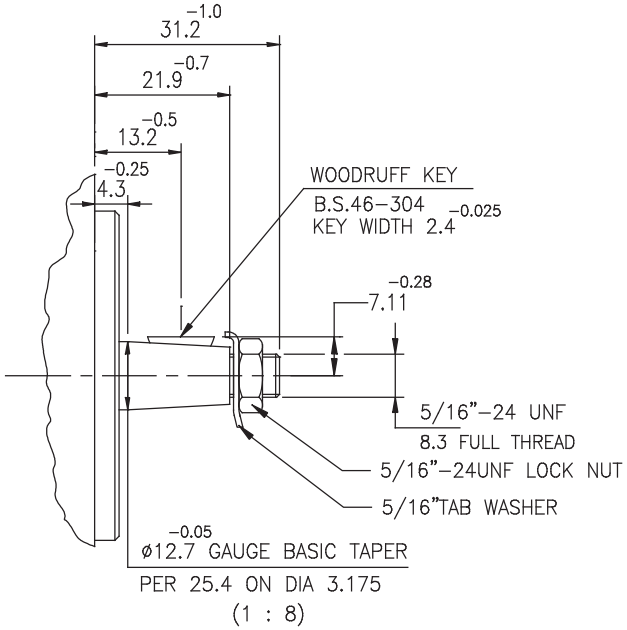

DRIVE SHAFT CODE - T
FLANGE CODE - D

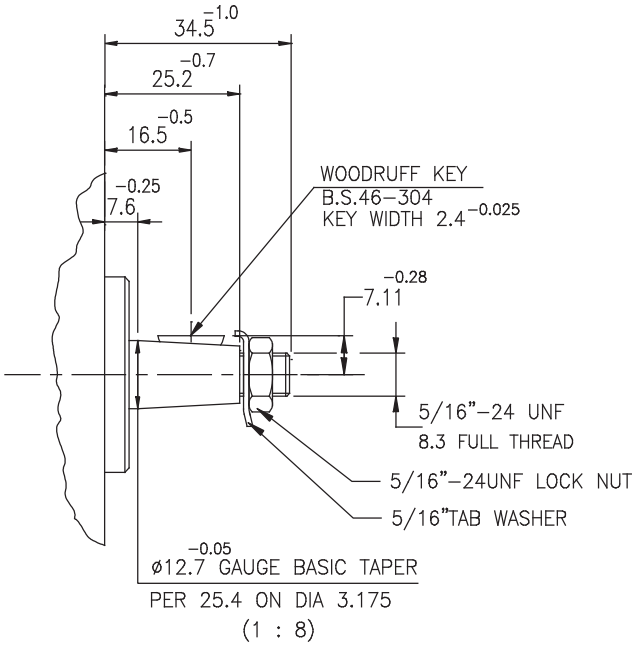

ALL DIMENSIONS ARE IN mm UNLESS OTHERWISE SPECIFIED

DRIVE SHAFT CODE - U
FLANGE CODE - S

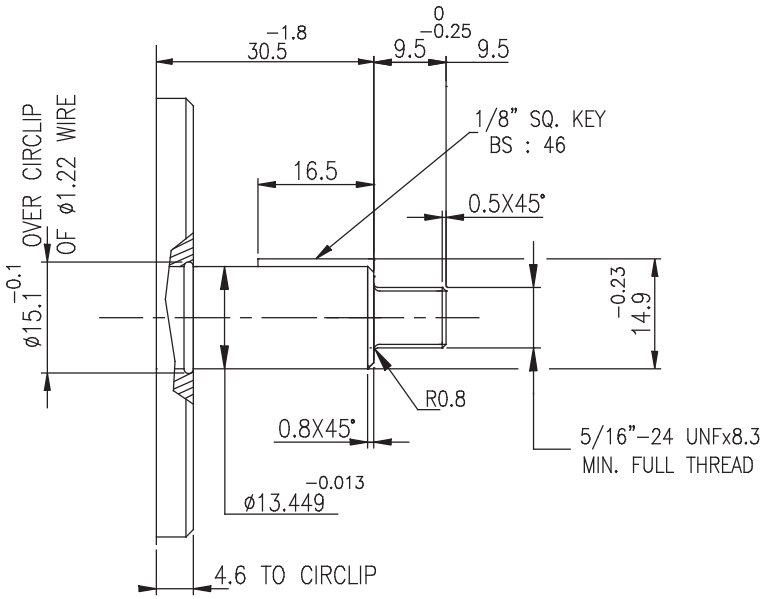

DRIVE SHAFT CODE - U
FLANGE CODE - D

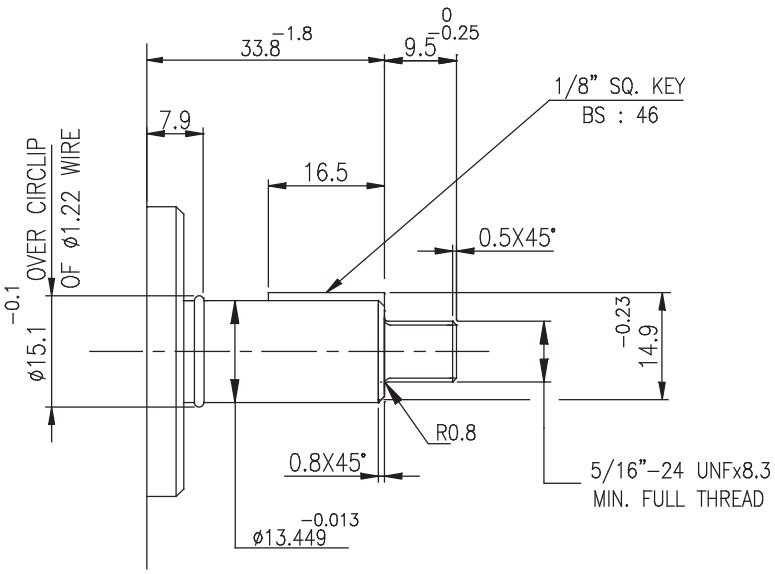

ALL DIMENSIONS ARE IN mm UNLESS OTHERWISE SPECIFIED

DRIVE SHAFT CODE - P
FLANGE CODE - S

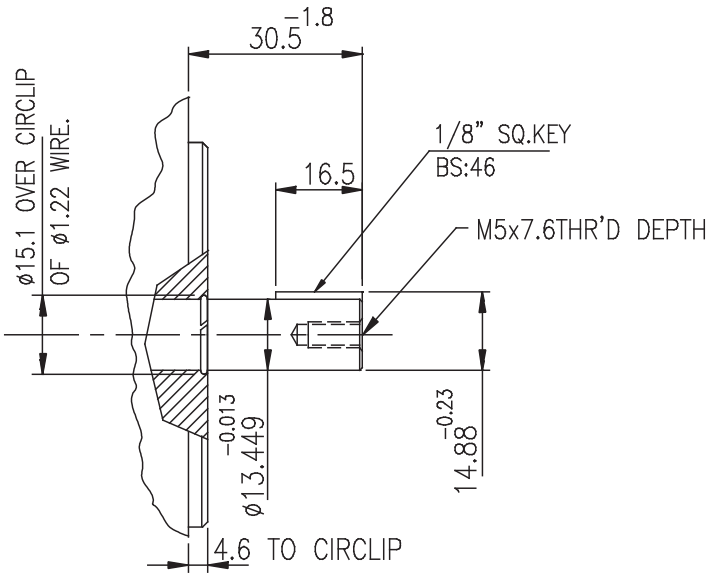

DRIVE SHAFT CODE - P
FLANGE CODE - D

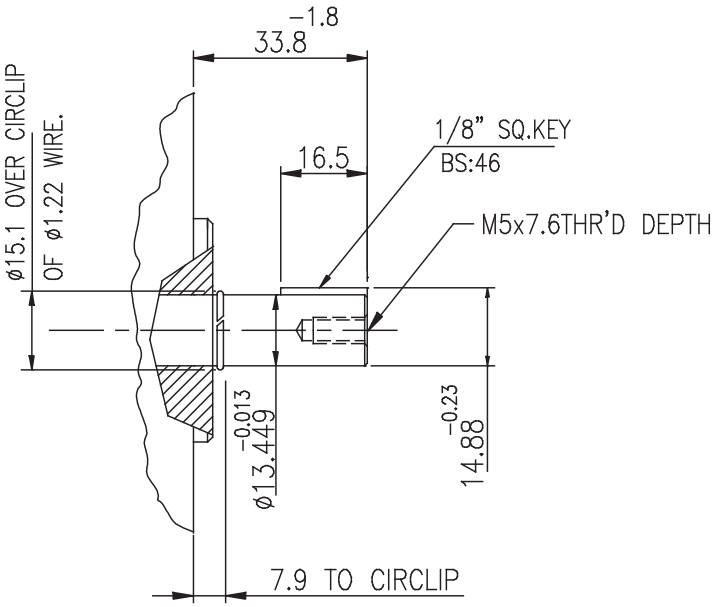

ALL DIMENSIONS ARE IN mm UNLESS OTHERWISE SPECIFIED

MOUNTING FLANGE CODE - S

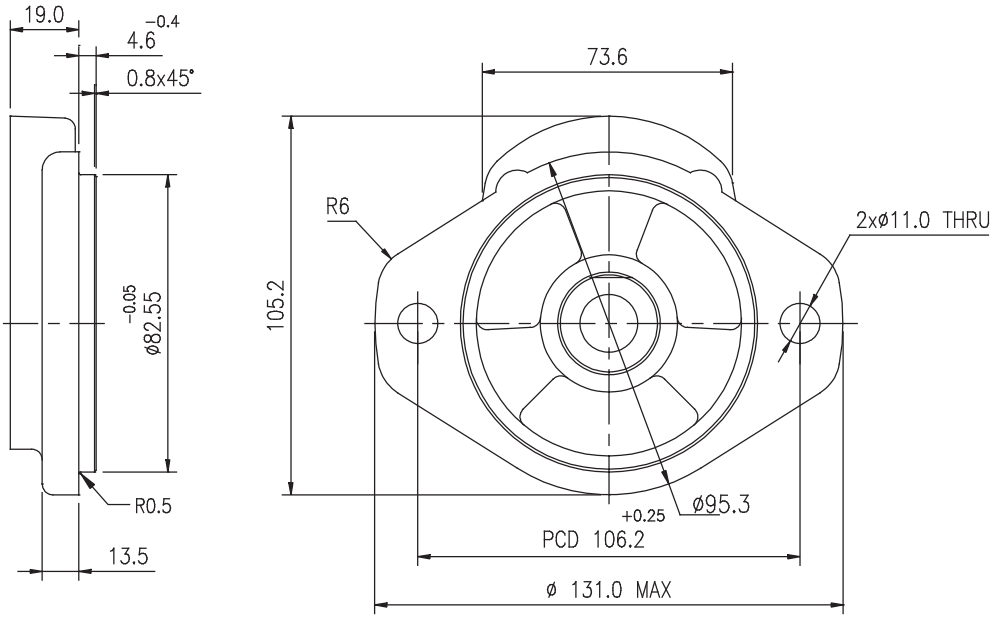

MOUNTING FLANGE CODE - D

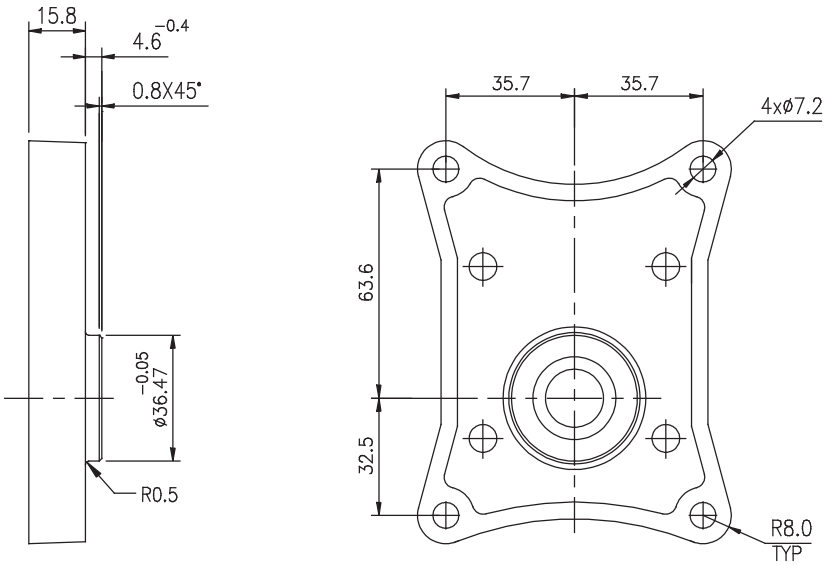

ALL DIMENSIONS ARE IN mm UNLESS OTHERWISE SPECIFIED

MOUNTING FLANGE CODE - W
(WHITE INC.)

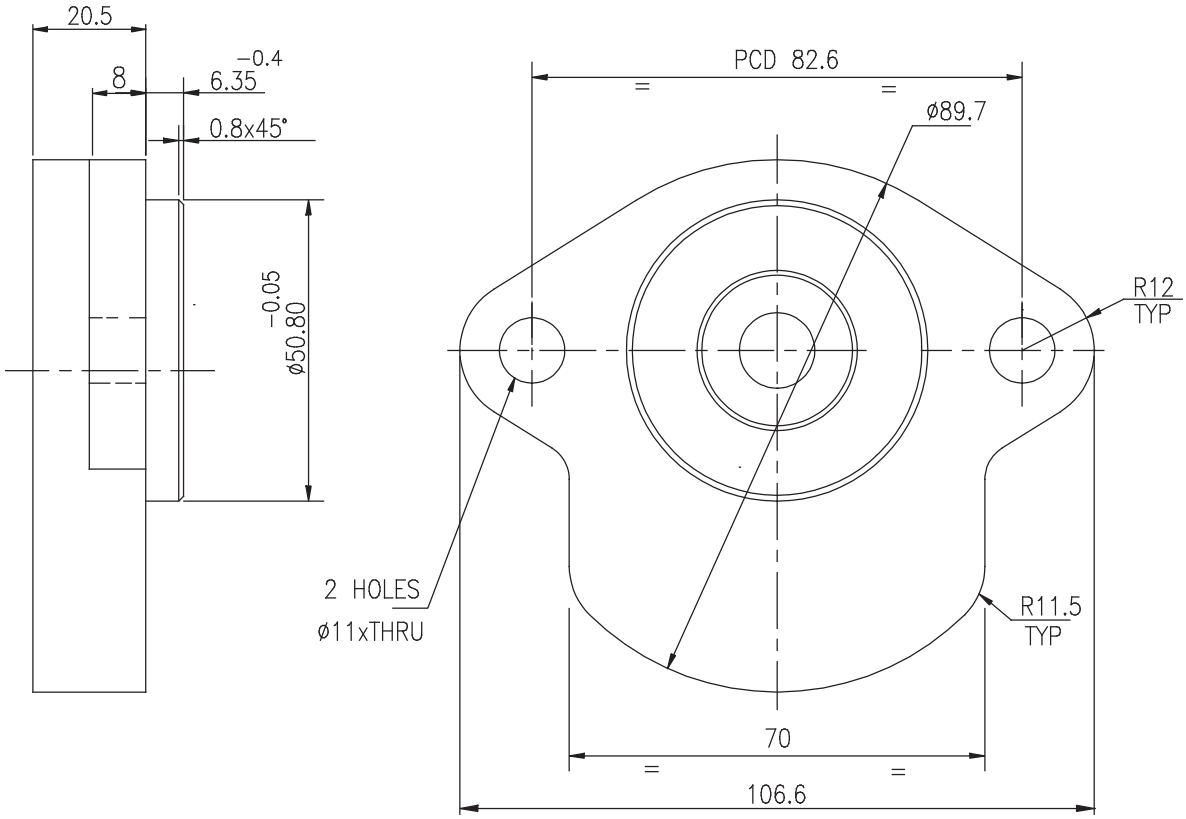

ALL DIMENSIONS ARE IN mm UNLESS OTHERWISE SPECIFIED

BODY PORT CODE - T

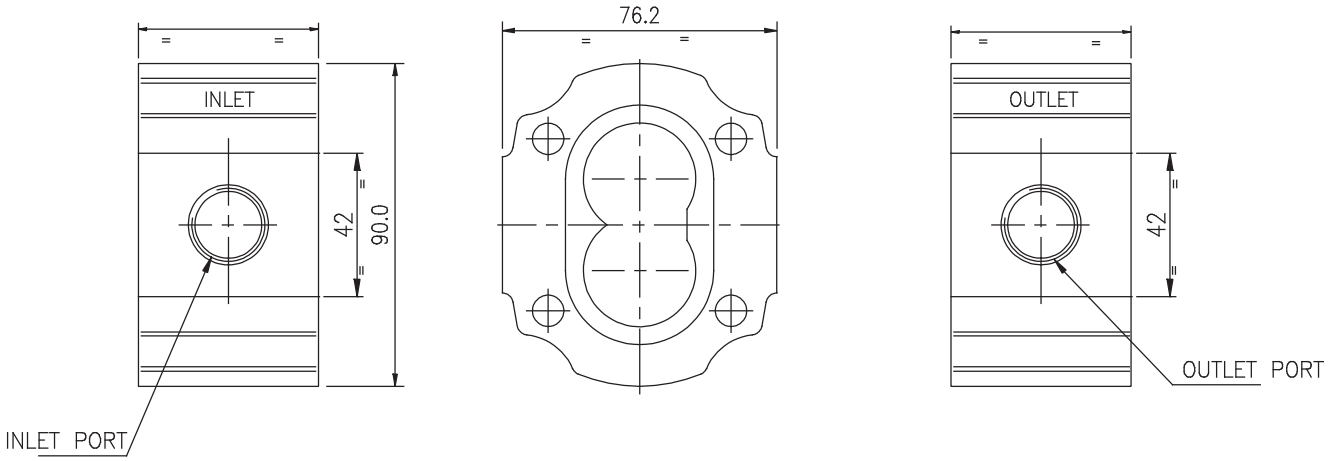

PUMP TYPE.	INLET PORT	THREAD DEPTH	OUTLET PORT	THREAD DEPTH
0P-3003	3/8″ BSPF	11.4	3/8″ BSPF	11.4
0P-3004	3/8″ BSPF	11.4	3/8″ BSPF	11.4
0P-3006	3/8″ BSPF	11.4	3/8″ BSPF	11.4
0P-3008	3/8″ BSPF	11.4	3/8″ BSPF	11.4
0P-3011	3/8″ BSPF	11.4	3/8″ BSPF	11.4
0P-3013	1/2″ BSPF	14	1/2″ BSPF	14
0P-3015	1/2″ BSPF	14	1/2″ BSPF	14

BODY PORT CODE - F

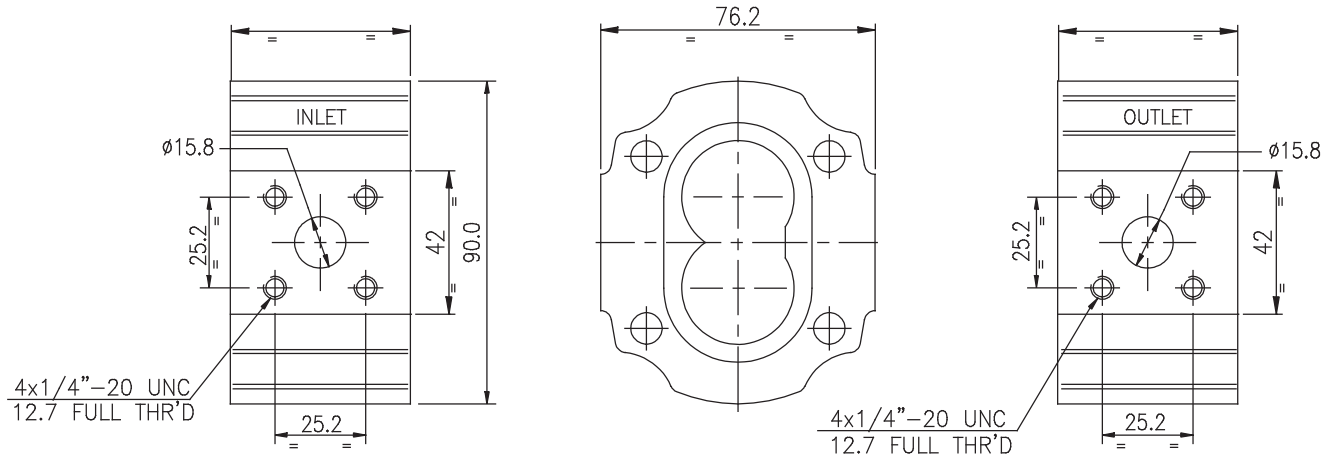

ALL DIMENSIONS ARE IN mm UNLESS OTHERWISE SPECIFIED

BODY PORT CODE - J

SAE O-RING THREADED PORTS (SAE:JI926/1)

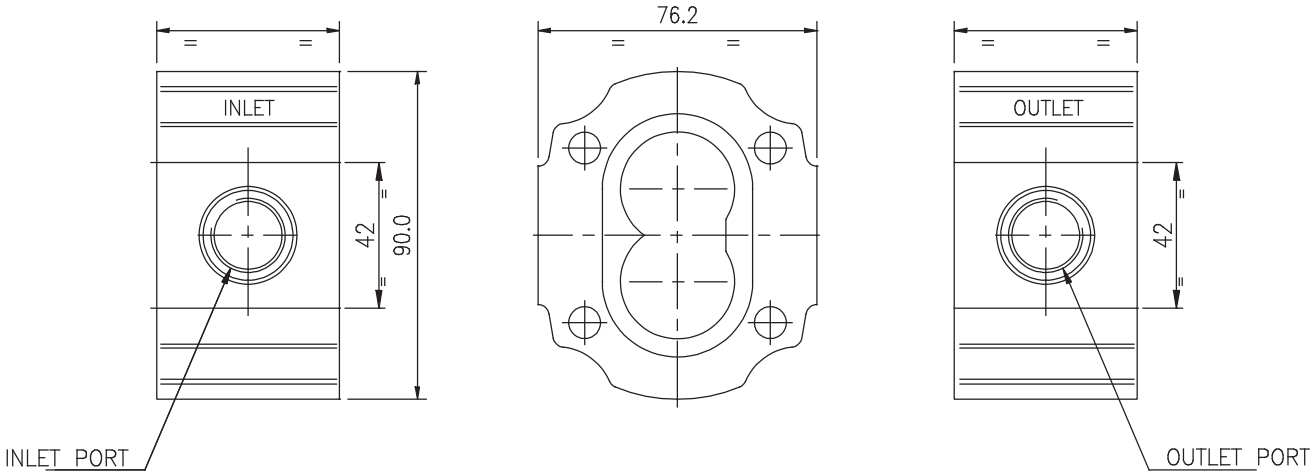

PUMP TYPE.	INLET PORT	THREAD DEPTH	OUTLET PORT	THREAD DEPTH
0P-3003	3/4”-16UN	14.2	3/4”-16UN	14.2
0P-3004	3/4”-16UN	14.2	3/4”-16UN	14.2
0P-3006	3/4”-16UN	14.2	3/4”-16UN	14.2
0P-3008	3/4”-16UN	14.2	3/4”-16UN	14.2
0P-3011	3/4”-16UN	14.2	3/4”-16UN	14.2
0P-3013	3/4”-16UN	14.2	3/4”-16UN	14.2
0P-3015	7/8”-14UN	16.5	3/4”-16UN	14.2

ALL DIMENSIONS ARE IN mm UNLESS OTHERWISE SPECIFIED

MOUNTING COVER CODE - A

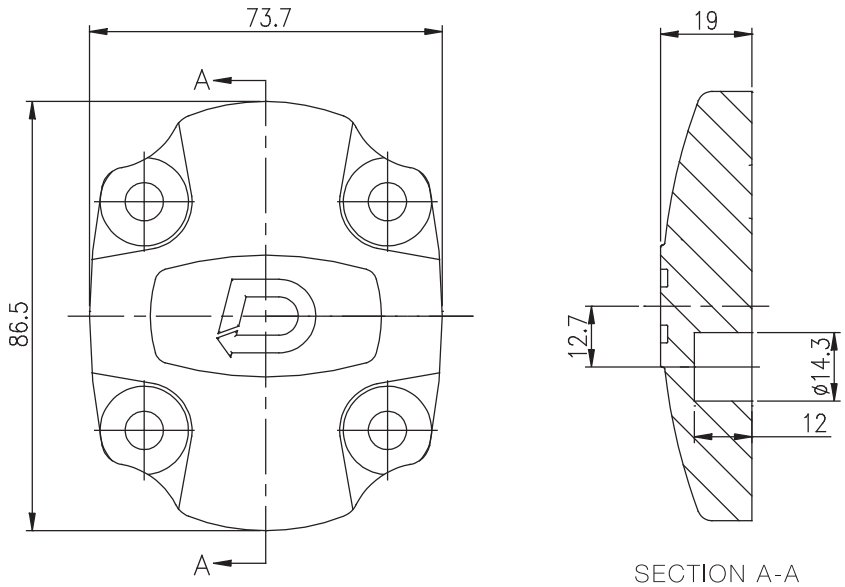

MOUNTING COVER CODE - B

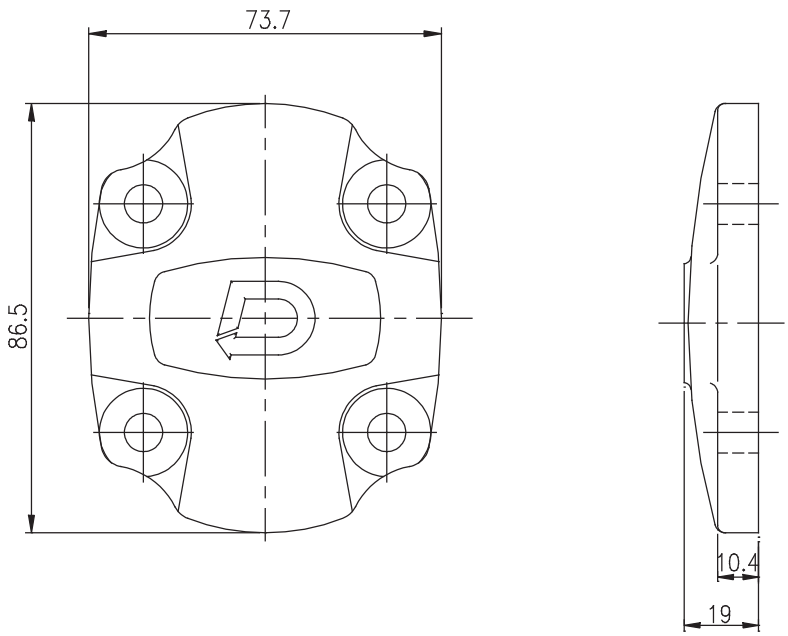

ALL DIMENSIONS ARE IN mm UNLESS OTHERWISE SPECIFIED

COVER WITH RELIEF VALVE CODE - R

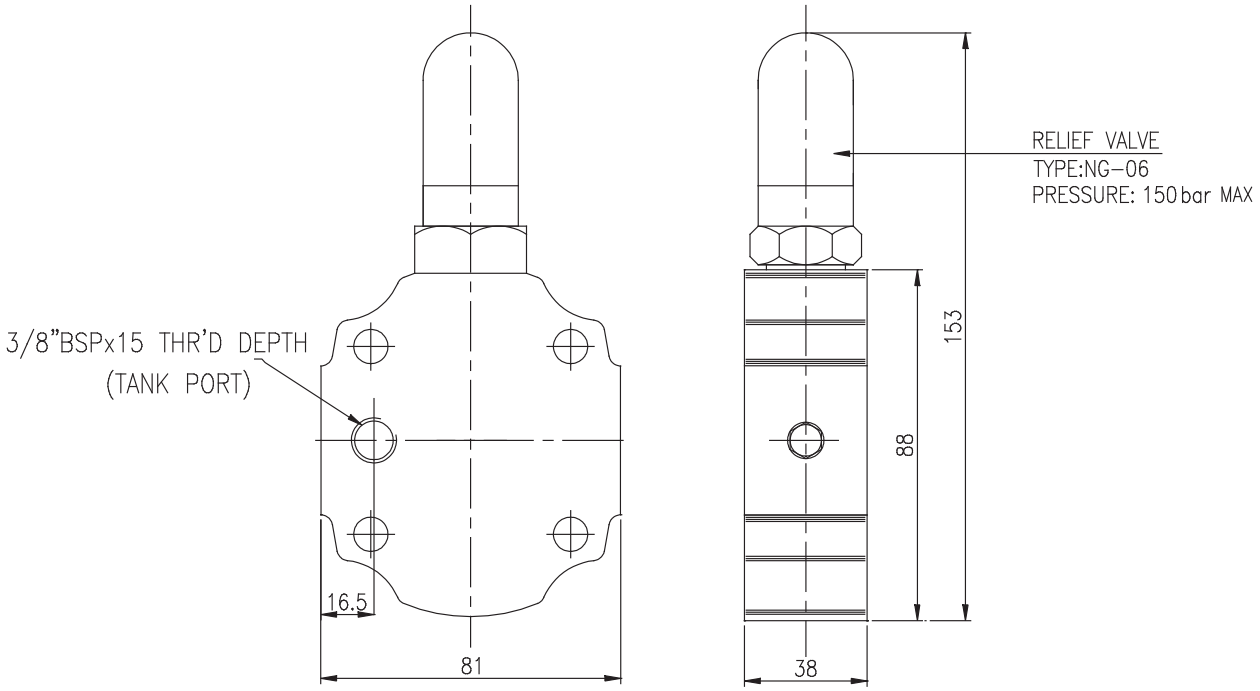

ALL DIMENSIONS ARE IN mm UNLESS OTHERWISE SPECIFIED

PERFORMANCE DATA

Pressures quoted are relief valve maximum by-pass
Performance with SAE 20W oil at 50˚C

PUMP TYPE	DISPLACEMENT	DELIVERY @1500 RPM & PRESSURE P		MAXIMUM CONTINUOUS PRESSURE P		SPEED AT MAXIMUM CONTINUOUS PRESSURE P	
	cc/rev	MIN lpm	MAX lpm	psi	bar	MAX	MIN
3017	6.1	7.8	9.2	3000	207	3500	700
3020	7	8.9	10.5	3000	207	3500	700
3028	9.4	12.2	14.2	3000	207	3500	700
3036	11.9	15.7	17.85	3000	207	3500	700
3044	14.3	18.9	21.5	3000	207	3500	700
3052	16.8	22.9	25.2	3000	207	3500	700
3060	19.2	26.5	28.8	3000	207	3500	700
3072	22.8	31.5	34.3	2525	174	3000	700
3090	28.1	38.8	42.2	2000	138	2400	700

TYPICAL PERFORMANCE

TYPICAL PUMP DELIVERY
Flow at Max. Pressure

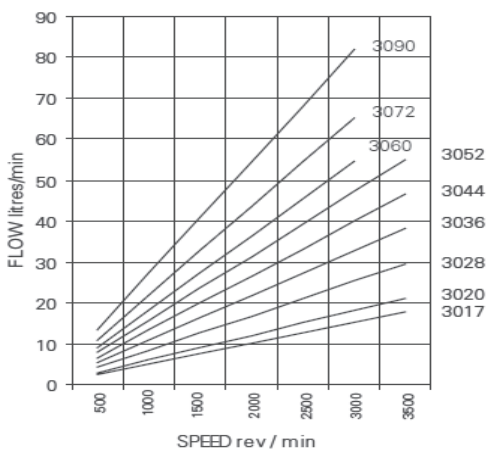

TYPICAL INPUT HORSEPOWER
Fluid SAE 20W
Fluid Temperature 50˚C

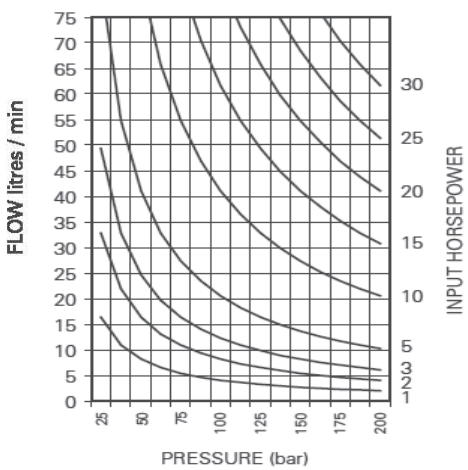

INSTALLATION DIMENSIONS

1P 3000 SERIES

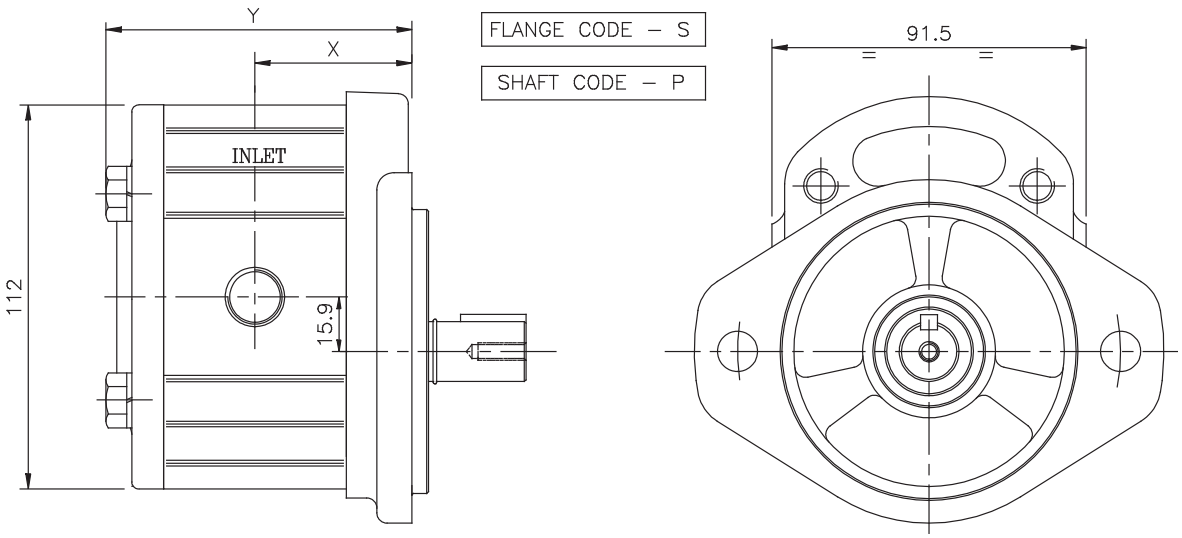

PUMP TYPE	DIMENSIONS	
	X	Y
1P-3017	41.8	82.4
1P-3020	42.6	83.9
1P-3028	44.1	87.0
1P-3036	45.6	90.1
1P-3044	54.6	108.1
1P-3052	56.2	111.2
1P-3060	57.7	114.3
1P-3072	60.0	118.9
1P-3090	63.3	125.5

NOTE:

- The representation for the pump assembly drawing is for anti-clockwise direction of shaft rotation as viewed from pump drive shaft end. For clockwise rotation of pump shaft, the position of inlet & outlet ports will interchange.
- Unless otherwise specified, the dimension 'X' is identical for both inlet & outlet port positions

ALL DIMENSIONS ARE IN mm UNLESS OTHERWISE SPECIFIED

DRIVE SHAFT CODE - U

FLANGE CODE - D & S

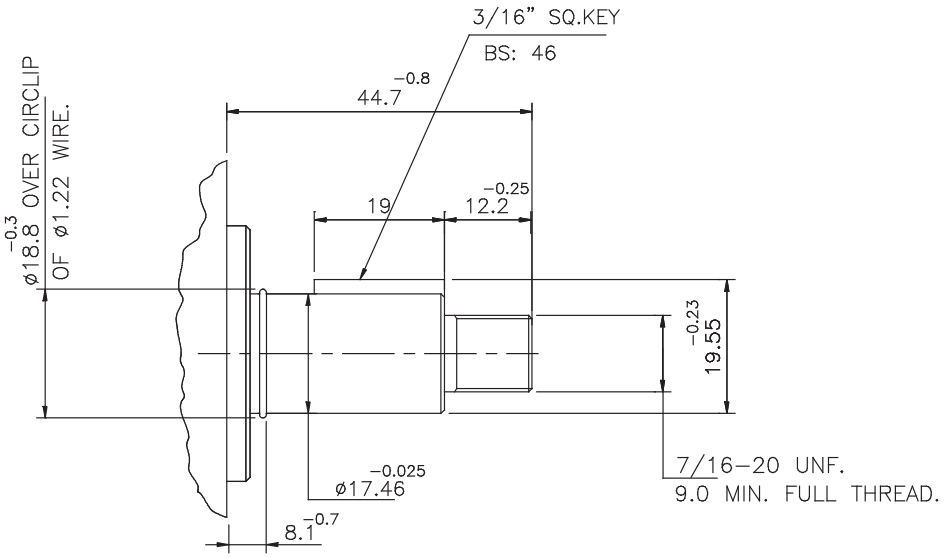

DRIVE SHAFT CODE - T

FLANGE CODE - D & S

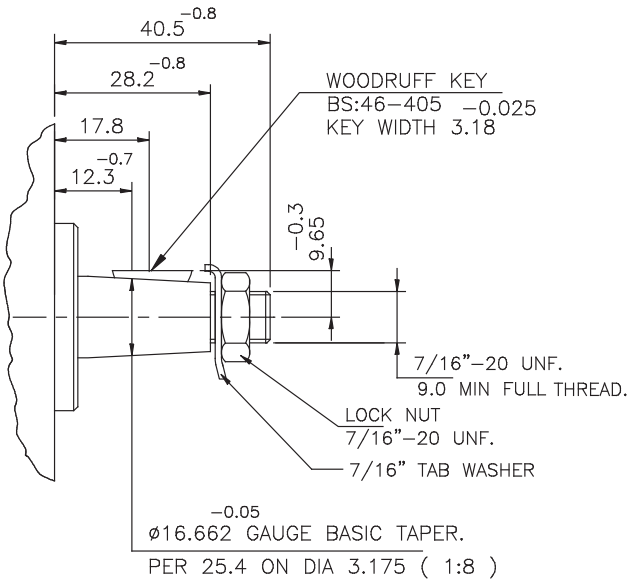

ALL DIMENSIONS ARE IN mm UNLESS OTHERWISE SPECIFIED

DRIVE SHAFT CODE - H

FLANGE CODE - D & S

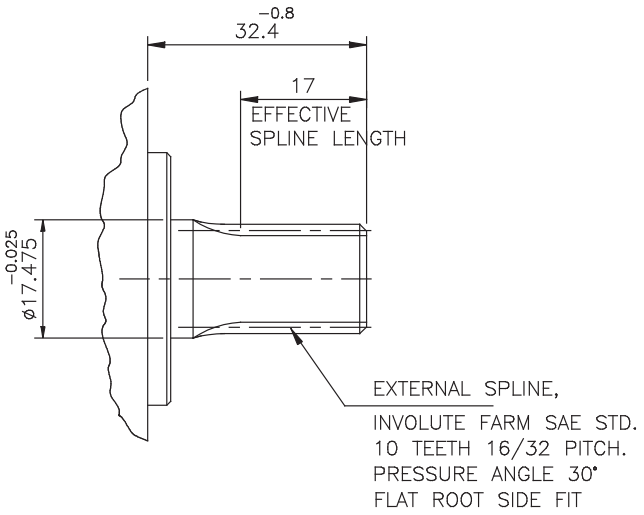

DRIVE SHAFT CODE - J

FLANGE CODE - D & S

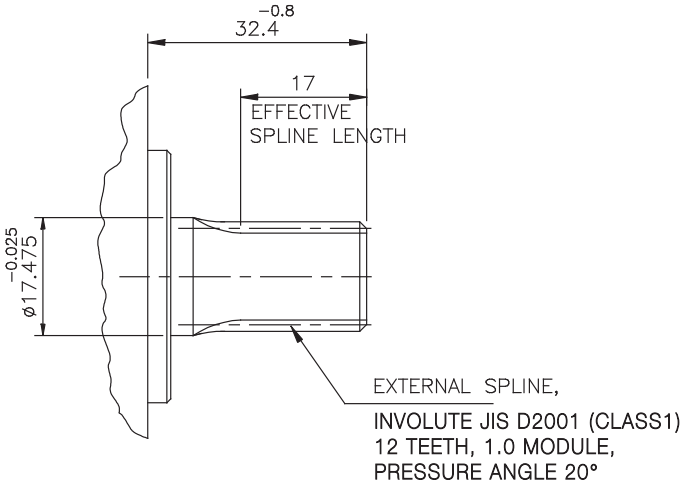

ALL DIMENSIONS ARE IN mm UNLESS OTHERWISE SPECIFIED

DRIVE SHAFT CODE - S

FLANGE CODE - D & S

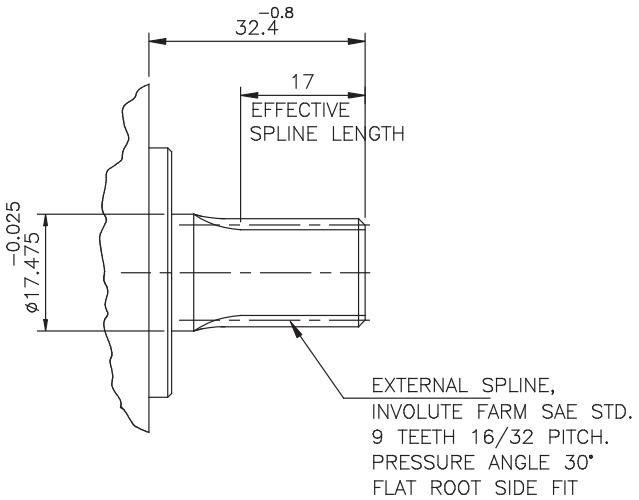

DRIVE SHAFT CODE - G

FLANGE CODE - D & S

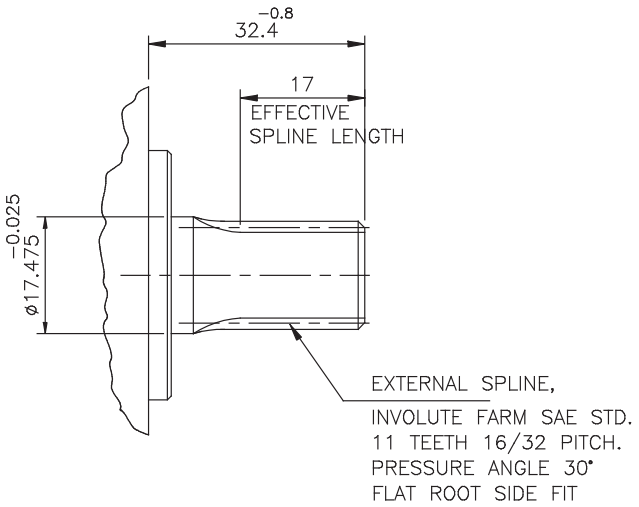

ALL DIMENSIONS ARE IN mm UNLESS OTHERWISE SPECIFIED

DRIVE SHAFT CODE - K
FLANGE CODE - K

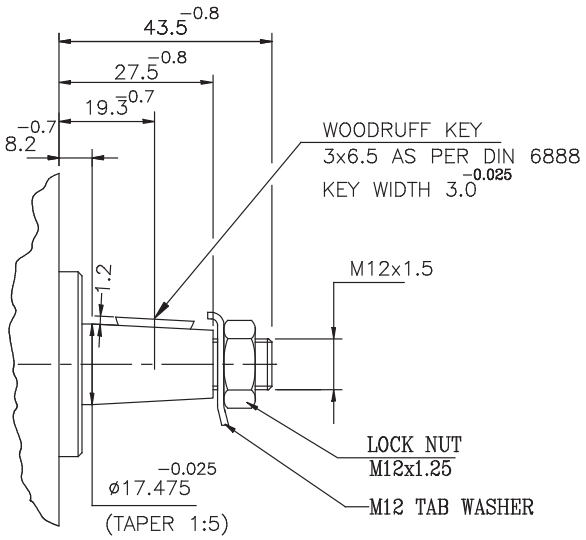

DRIVE SHAFT CODE - K
FLANGE CODE - D & S

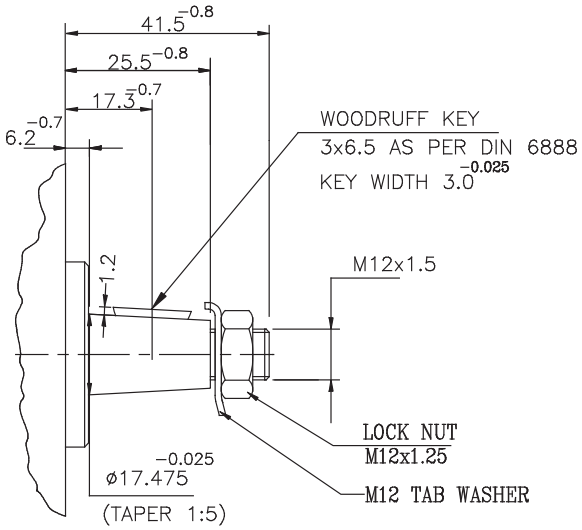

ALL DIMENSIONS ARE IN mm UNLESS OTHERWISE SPECIFIED

DRIVE SHAFT CODE - P

FLANGE CODE - D & S

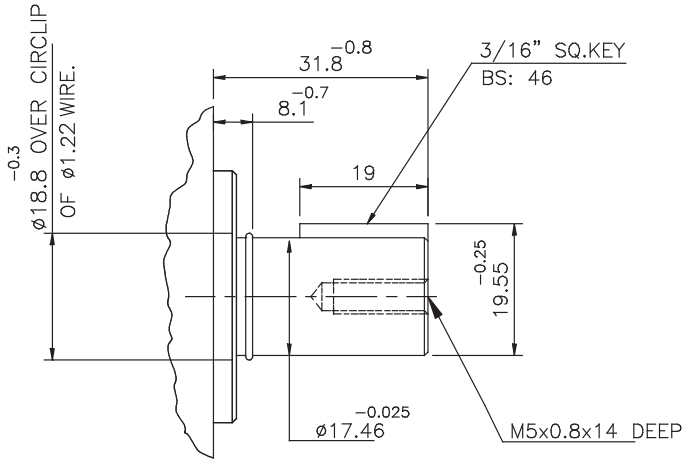

DRIVE SHAFT CODE - L

FLANGE CODE - D & S

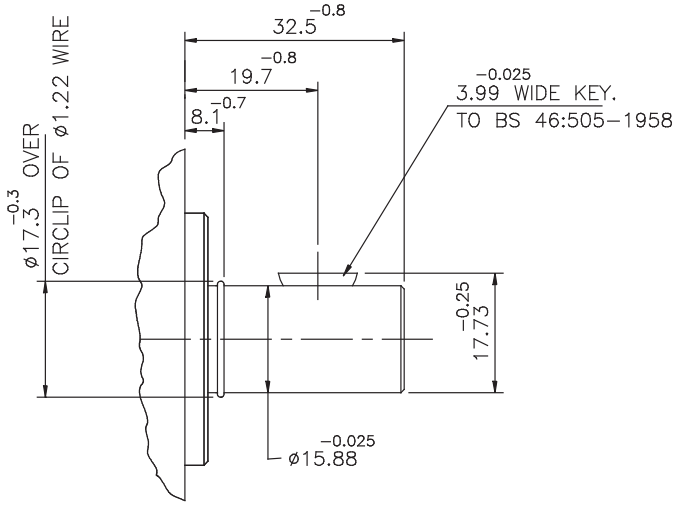

ALL DIMENSIONS ARE IN mm UNLESS OTHERWISE SPECIFIED

BODY PORT CODE - T

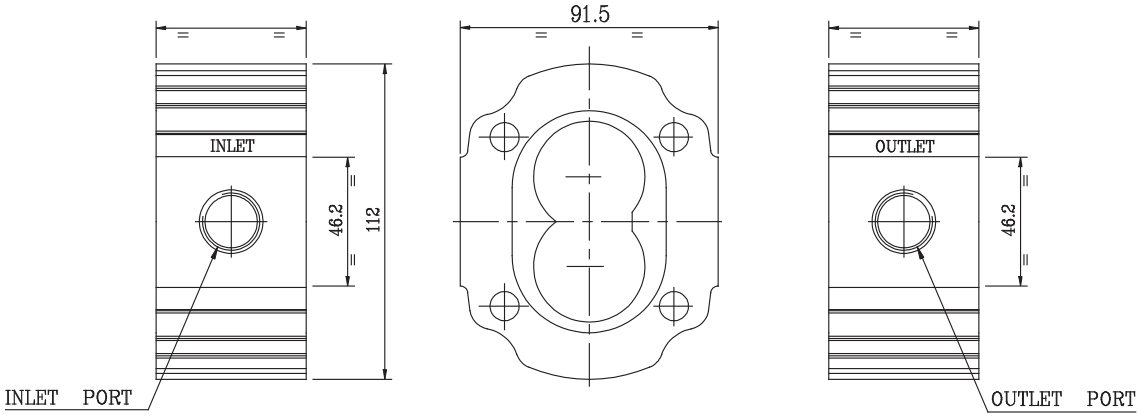

PUMP TYPE	INLET PORT	THREAD DEPTH	OUTLET PORT	THREAD DEPTH
1P 3017	1/2″ BSPF	14.0	1/2″ BSPF	14.0
1P 3020	1/2″ BSPF	14.0	1/2″ BSPF	14.0
1P 3028	1/2″ BSPF	14.0	1/2″ BSPF	14.0
1P 3036	3/4″ BSPF	17.8	1/2″ BSPF	14.0
1P 3044	3/4″ BSPF	17.8	3/4″ BSPF	17.8
1P 3052	3/4″ BSPF	17.8	3/4″ BSPF	17.8
1P 3060	3/4″ BSPF	17.8	3/4″ BSPF	17.8
1P 3072	3/4″ BSPF	17.8	3/4″ BSPF	17.8
1P 3090	3/4″ BSPF	17.8	3/4″ BSPF	17.8

BODY PORT CODE - F

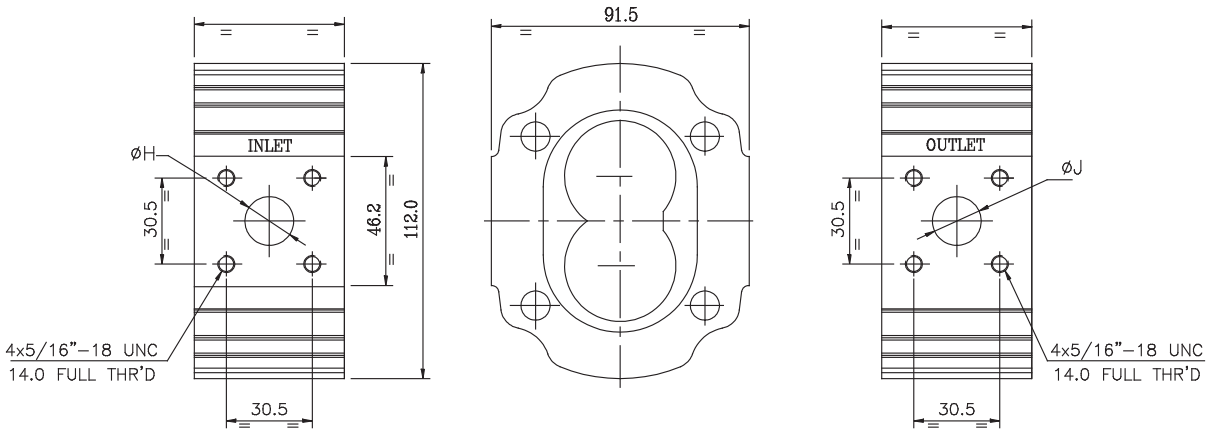

PUMP TYPE	INLET PORT $^{+0.5}_{ØH}$	OUTLET PORT $^{+0.5}_{ØJ}$
IP 3017	17.3	17.3
IP 3020	17.3	17.3
IP 3028	17.3	17.3
IP 3036	17.3	17.3
1P 3044	20.3	20.3
IP 3052	20.3	20.3
IP 3060	20.3	20.3
IP 3072	20.3	20.3
IP 3090	20.3	20.3

ALL DIMENSIONS ARE IN mm UNLESS OTHERWISE SPECIFIED

CONSULT MARKETING FOR MORE FITMENT OPTIONS

BODY PORT CODE - J

SAE O-RING THREADED PORTS. (SAE:J1926/1)

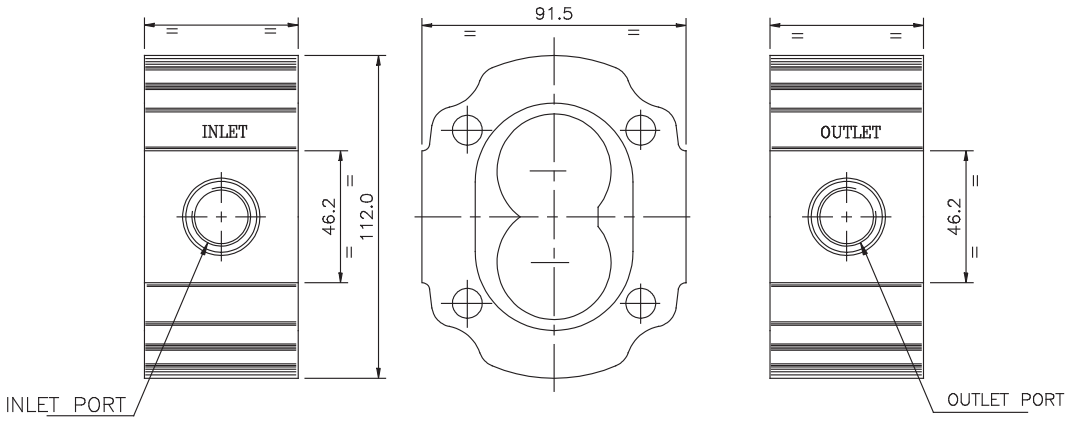

PUMP TYPE	INLET PORT	THREAD DEPTH	OUTLET PORT	THREAD DEPTH
1P 3017	1-1/16"12UN	19	7/8"-14UN	16.5
1P 3020	1-1/16"12UN	19	7/8"-14UN	16.5
1P 3028	1-1/16"12UN	19	7/8"-14UN	16.5
1P 3036	1-1/16"12UN	19	7/8"-14UN	16.5
1P 3044	1-5/16"12UN	19	1-1/16"12UN	19
1P 3052	1-5/16"12UN	19	1-1/16"12UN	19
1P 3060	1-5/16"12UN	19	1-1/16"12UN	19
1P 3072	1-5/16"12UN	19	1-1/16"12UN	19
1P 3090	1-5/16"12UN	19	1-1/16"12UN	19

BODY PORT CODE - S

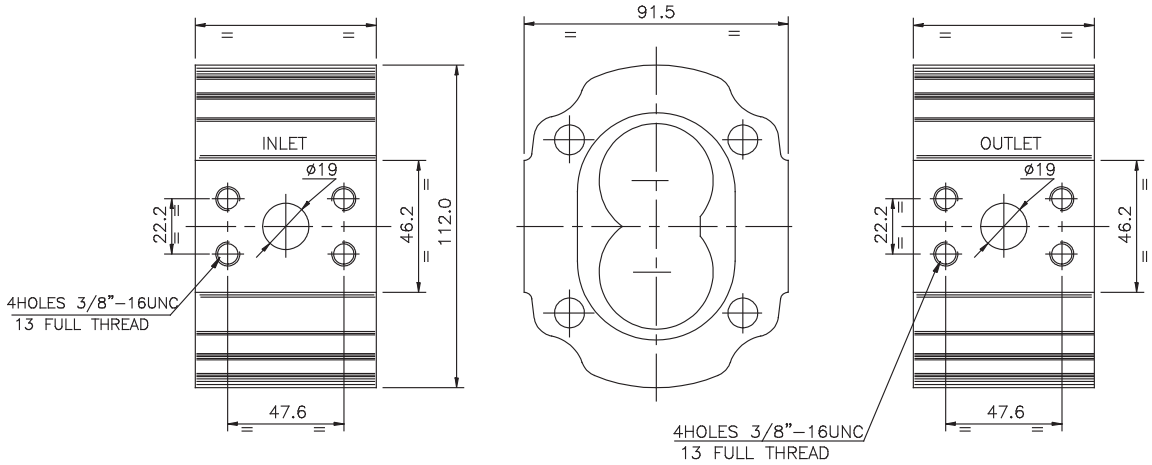

PUMP TYPE
IP 3044
IP 3052
IP 3060
IP 3072
IP 3090

ALL DIMENSIONS ARE IN mm UNLESS OTHERWISE SPECIFIED

CONSULT MARKETING FOR MORE FITMENT OPTIONS

MOUNTING FLANGE P-3000 PROFILE

CODE-S (SAE A 2 BOLT MTG)

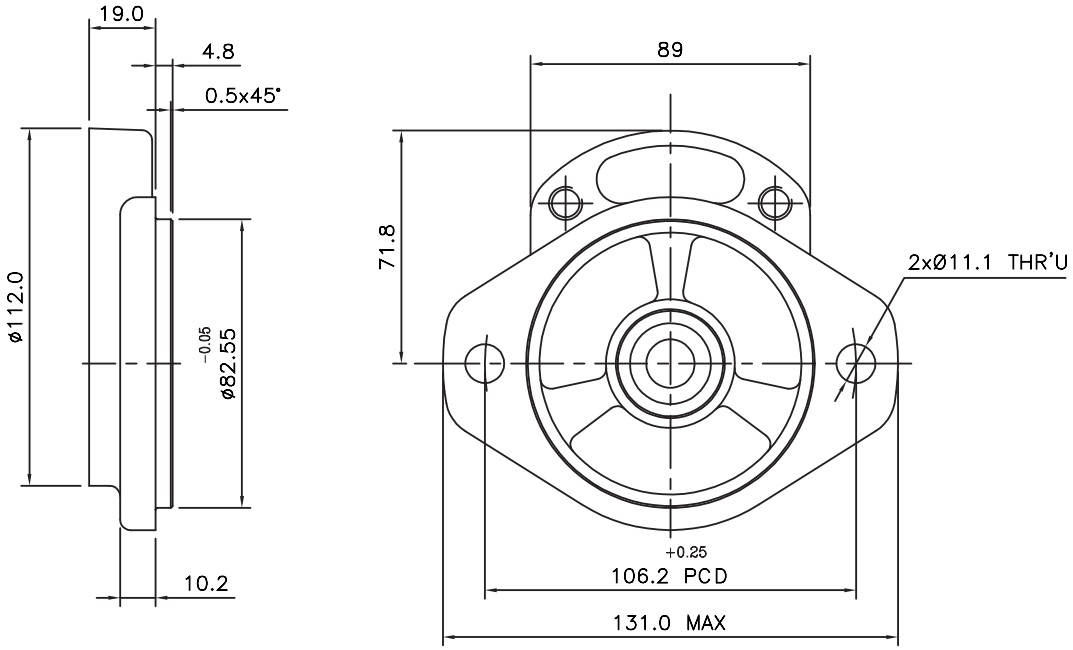

CODE - D (4 BOLT MTG)

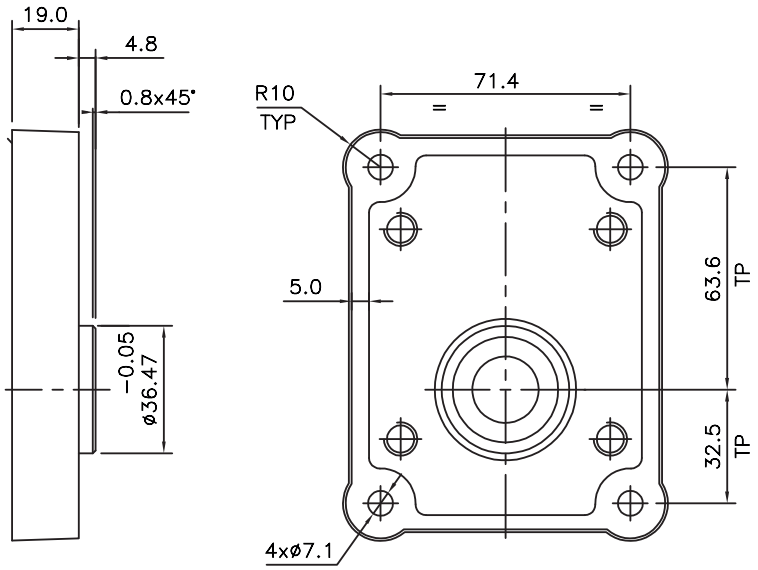

ALL DIMENSIONS ARE IN mm UNLESS OTHERWISE SPECIFIED

MOUNTING FLANGE CODE - K
(CLOCKWISE ROTATION)
2-BOLT MOUNTING

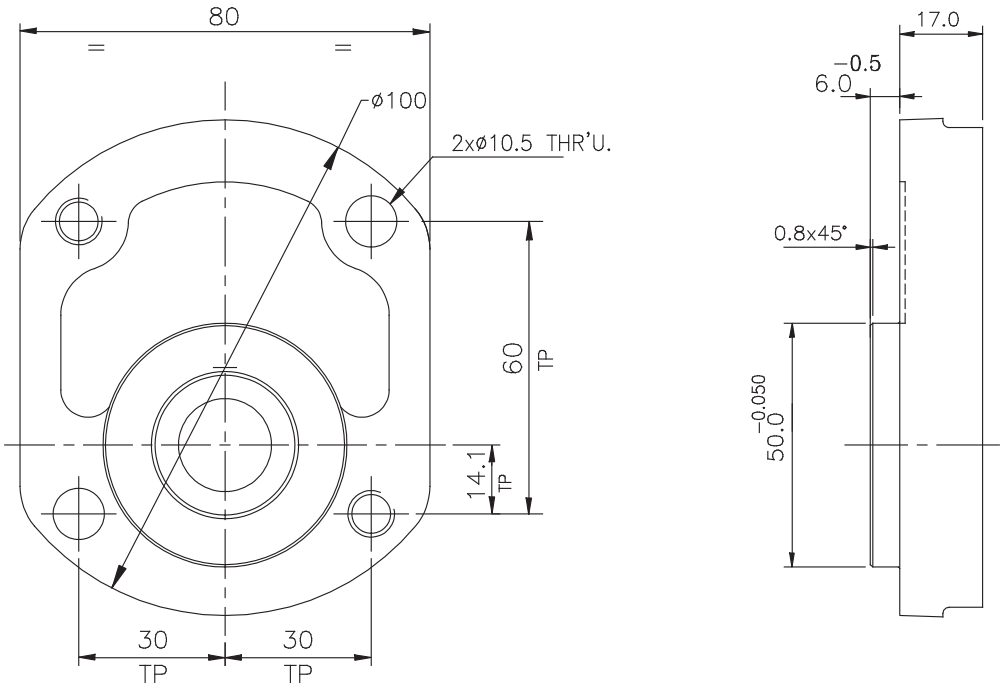

MOUNTING FLANGE CODE - K
(ANTI CLOCKWISE ROTATION)
2-BOLT MOUNTING

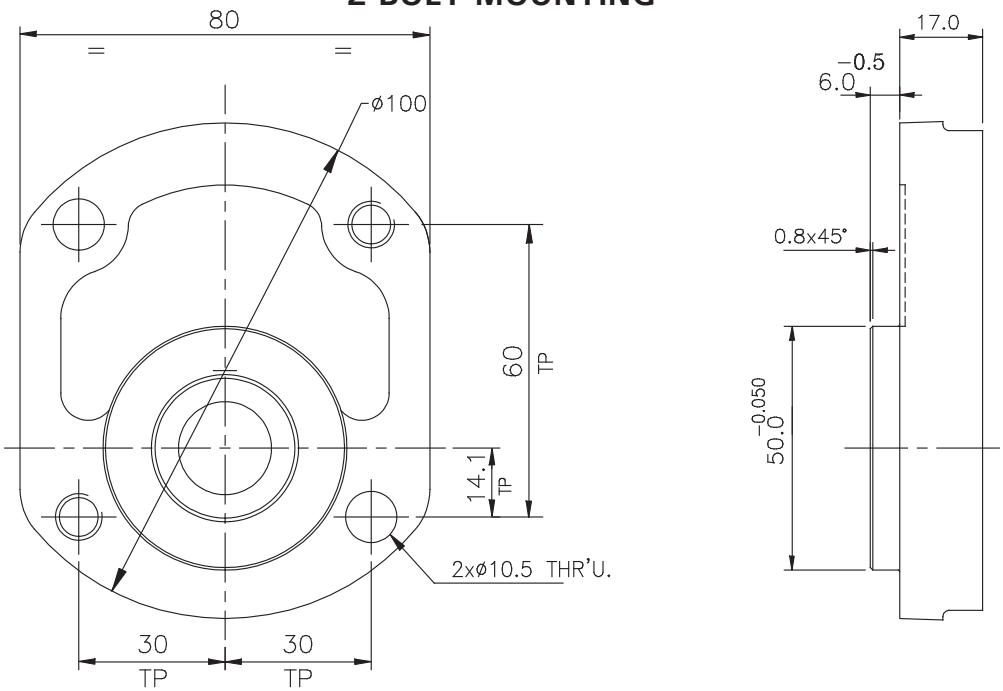

ALL DIMENSIONS ARE IN mm UNLESS OTHERWISE SPECIFIED

PUMP COVER CODE - A

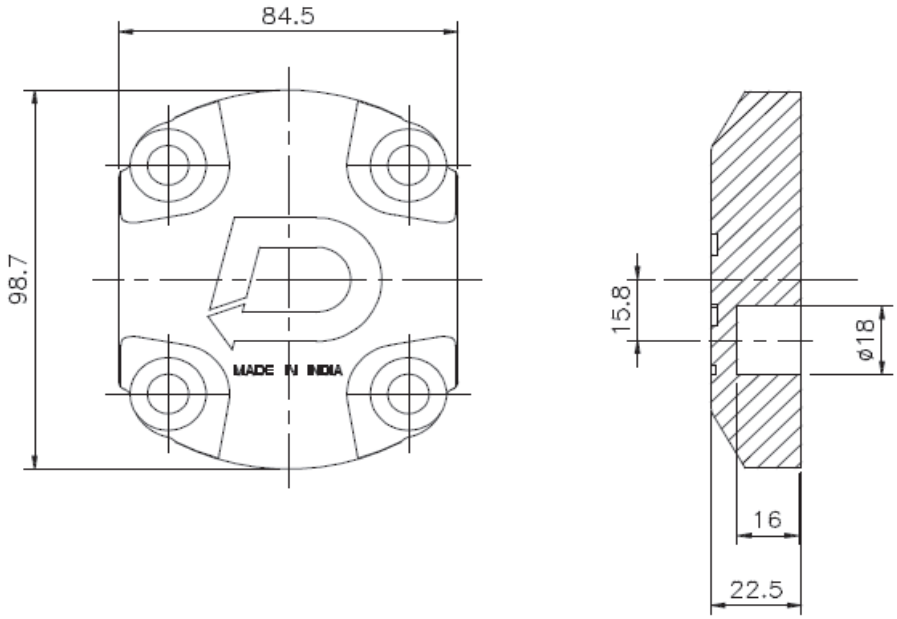

PUMP COVER CODE - B

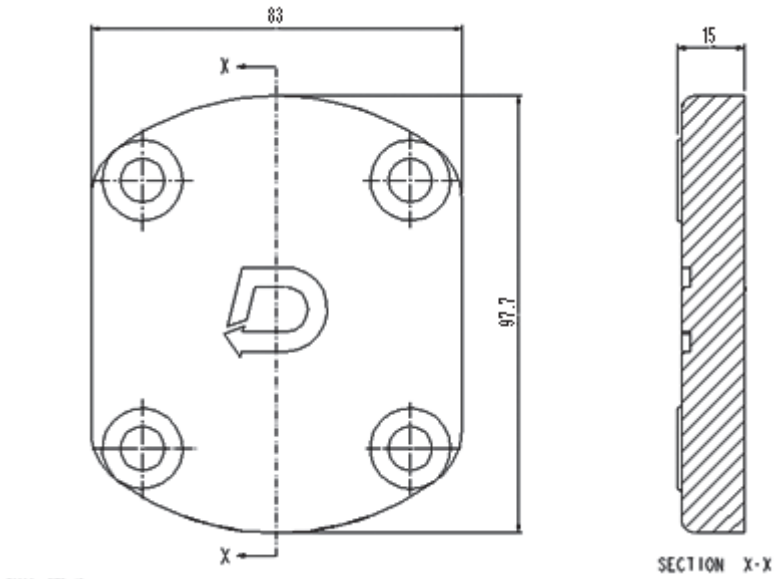

ALL DIMENSIONS ARE IN mm UNLESS OTHERWISE SPECIFIED

COVER WITH RELIEF VALVE CODE - R

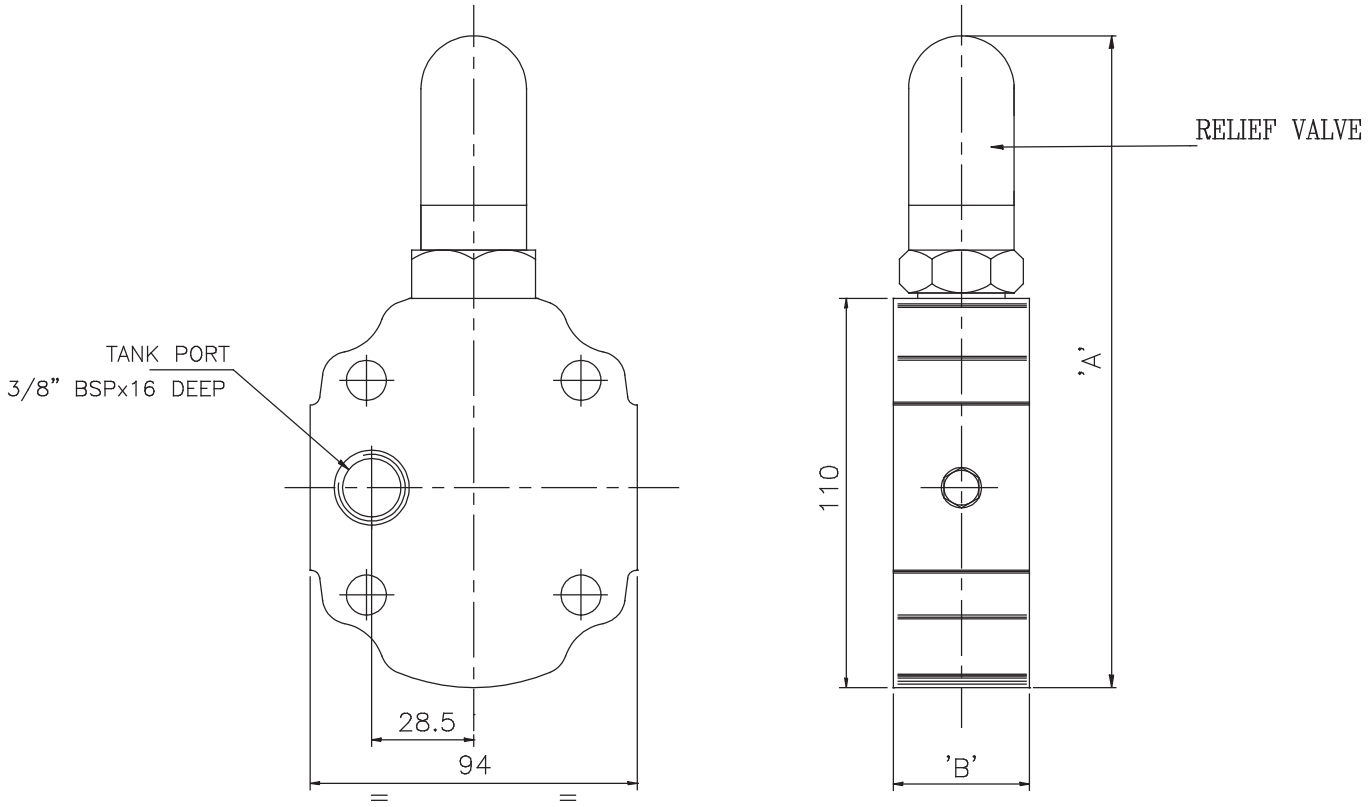

PUMP TYPE	RELIEF VALVE SIZE	DIMENSION-A	DIMENSION-B	FLOW RATING ltr/min	PRESSURE RATING bar
1P 3017 TO 1P 3036	NG-6	170	38	up to 20	207 Max
1P 3044 TO 1P 3090	NG-10	175	45	20 to 40	207 max

ALL DIMENSIONS ARE IN mm UNLESS OTHERWISE SPECIFIED

PERFORMANCE DATA

Pressures quoted are relief valve maximum by-pass
Performance with SAE 20W oil at 50˚C

PUMP TYPE	DISPLACEMENT	DELIVERY @1500 RPM & PRESSURE P		MAXIMUM CONTINUOUS PRESSURE P		SPEED AT MAXIMUM CONTINUOUS PRESSURE P	
	cc/rev	MIN (lpm)	MAX (lpm)	psi	bar	MAX	MIN
4017	6.1	7.8	9.2	3000	207	3500	700
4020	7	8.9	10.5	3000	207	3500	700
4028	9.4	12.2	14.2	3000	207	3500	700
4036	11.9	15.7	17.85	3000	207	3500	700
4044	14.3	18.9	21.5	3000	207	3500	700
4052	16.8	22.9	25.2	3000	207	3500	700
4060	19.2	26.5	28.8	3000	207	3500	700
4072	22.8	31.5	34.3	2525	174	3000	700
4090	28.13	38.8	42.2	2000	138	2400	700

TYPICAL PERFORMANCE

TYPICAL PUMP DELIVERY
Flow at Max. Pressure

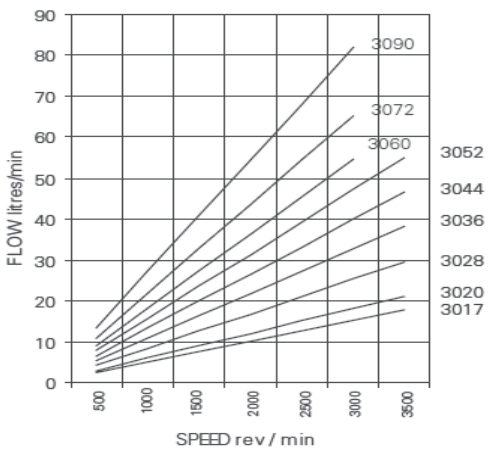

TYPICAL INPUT HORSEPOWER
Fluid SAE 20W
Fluid Temperature 50˚C

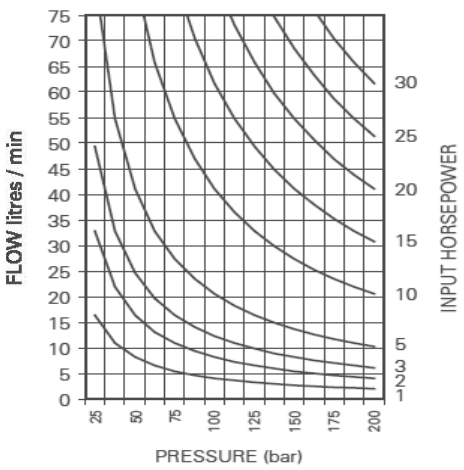

INSTALLATION DIMENSIONS

1P 4000 SERIES

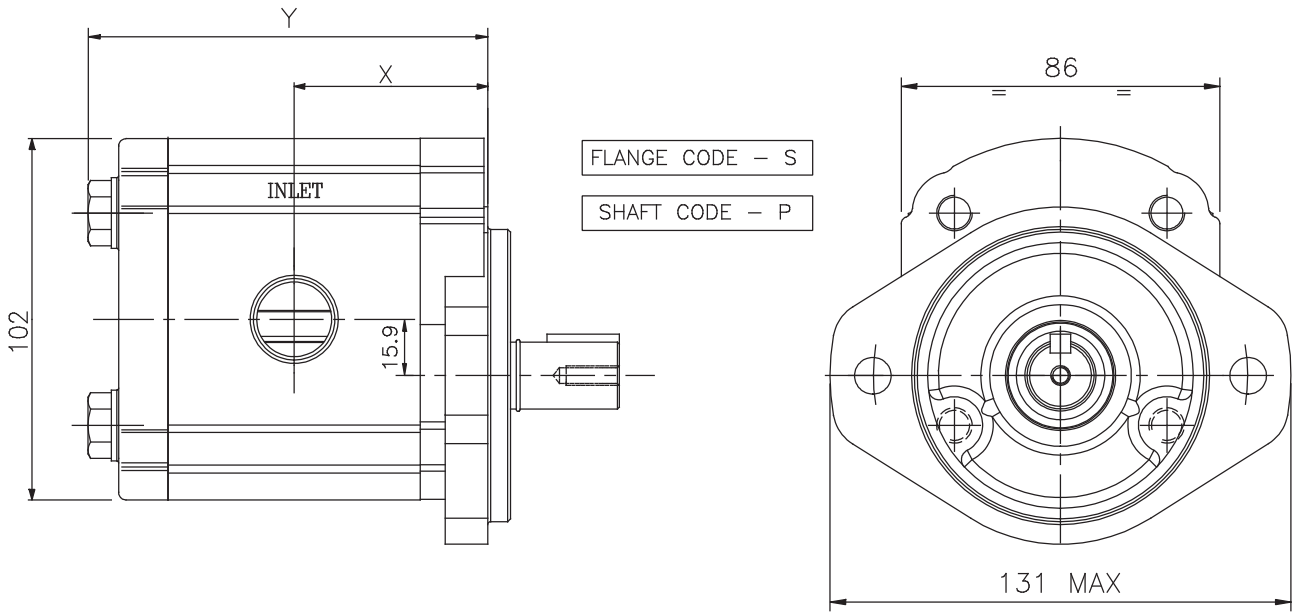

PUMP TYPE	DIMENSIONS	
	X	Y
1P-4017	41.8	87.0
1P-4020	42.6	88.6
1P-4028	44.1	91.6
1P-4036	45.6	94.7
1P-4044	54.6	112.8
1P-4052	56.2	115.8
1P-4060	57.7	118.9
1P-4072	60.0	123.5
1P-4090	63.3	130.2

NOTE:

- The representation for the pump assembly drawing is for anti-clockwise direction of shaft rotation as viewed from pump drive shaft end. For clockwise rotation of pump shaft, the position of inlet & outlet ports will interchange.
- Unless otherwise specified, the dimension 'X' is identical for both inlet & outlet port positions

ALL DIMENSIONS ARE IN mm UNLESS OTHERWISE SPECIFIED

DRIVE SHAFT CODE - K

FLANGE CODE - K

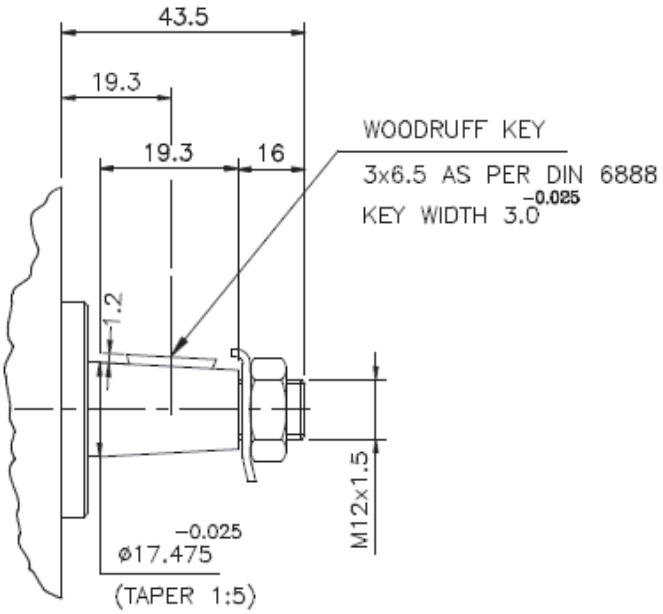

DRIVE SHAFT CODE - H

FLANGE CODE - D & S

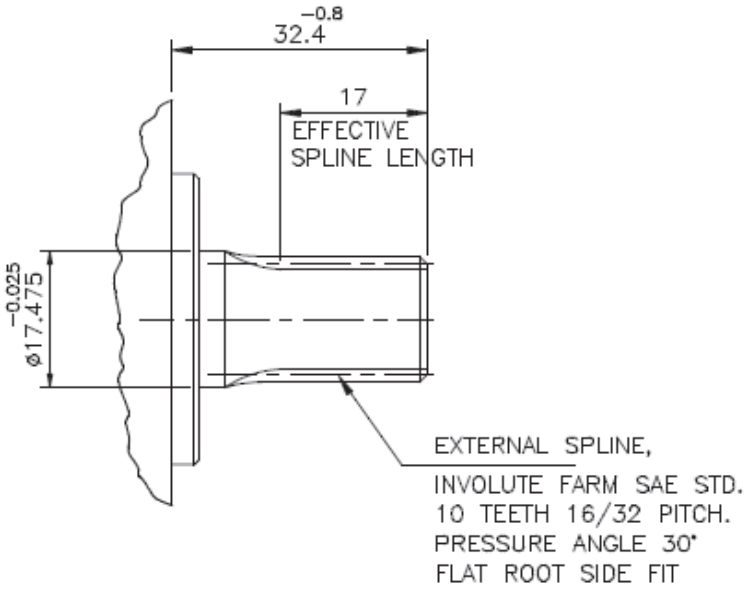

ALL DIMENSIONS ARE IN mm UNLESS OTHERWISE SPECIFIED

DRIVE CODE - U

FLANGE CODE - D & S

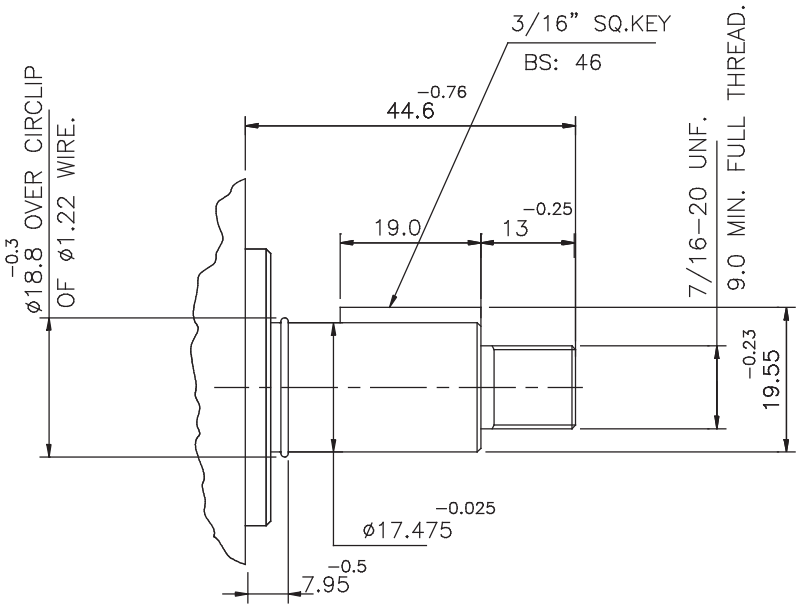

SHAFT CODE - T

FLANGE CODE - D & S

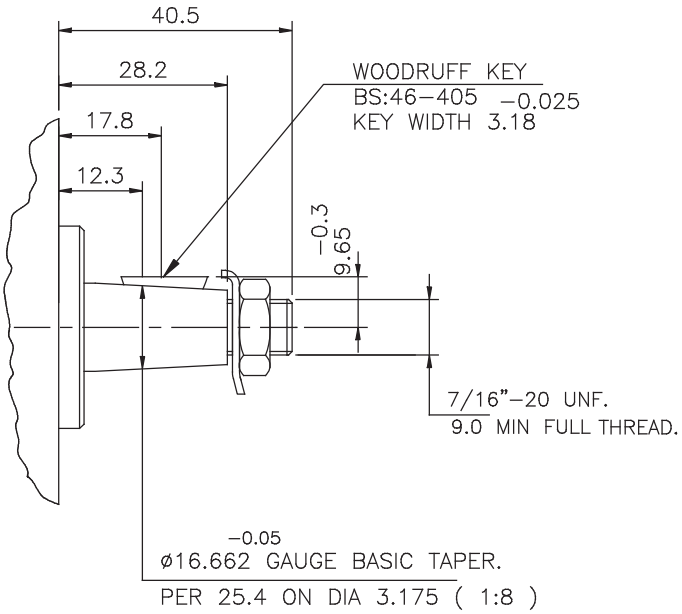

ALL DIMENSIONS ARE IN mm UNLESS OTHERWISE SPECIFIED

DRIVE SHAFT CODE - P

FLANGE CODE - D & S

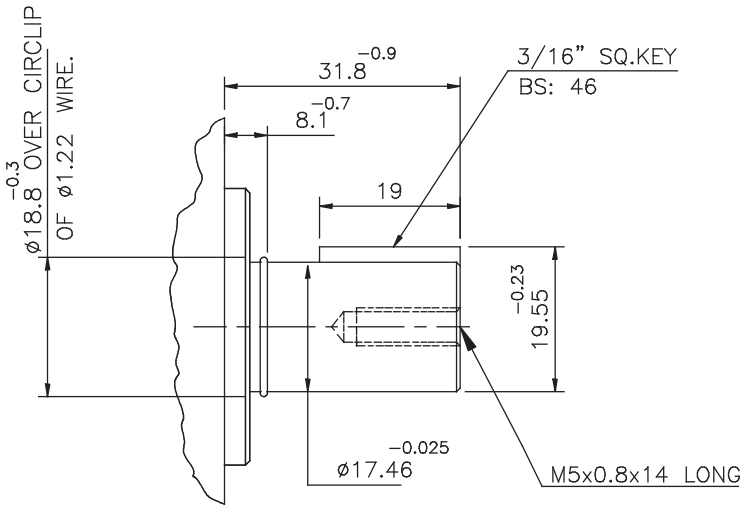

DRIVE SHAFT CODE - L

FLANGE CODE - D & S

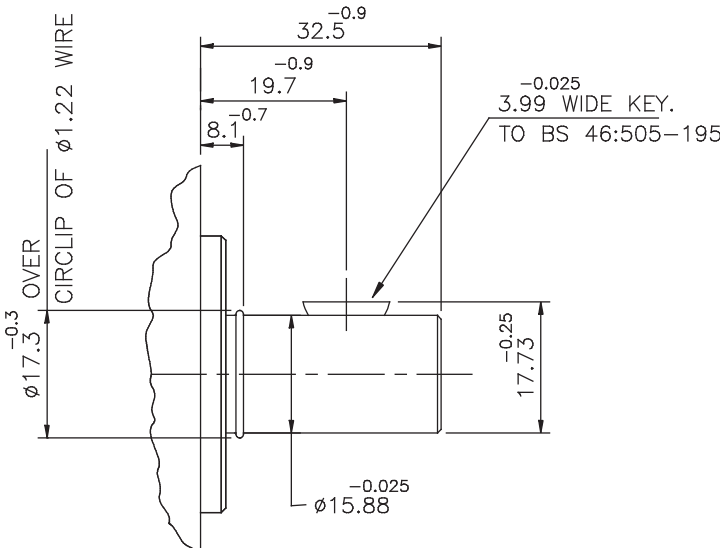

ALL DIMENSIONS ARE IN mm UNLESS OTHERWISE SPECIFIED

DRIVE SHAFT CODE - K

FLANGE CODE - D & S

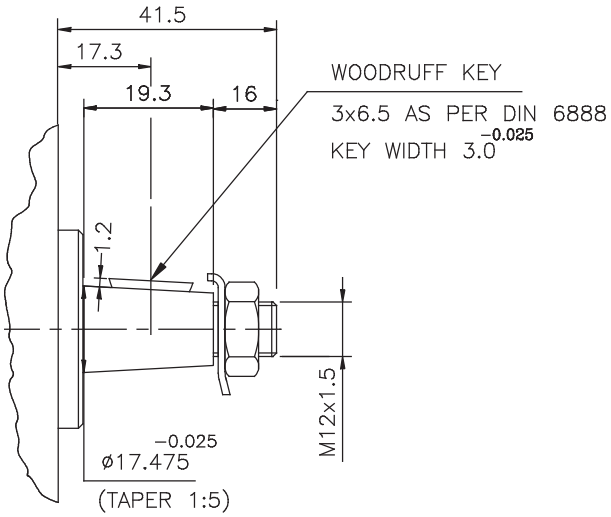

ALL DIMENSIONS ARE IN mm UNLESS OTHERWISE SPECIFIED

MOUNTING FLANGE CODE - K

2 BOLT MOUNTING CLOCKWISE ROTATION

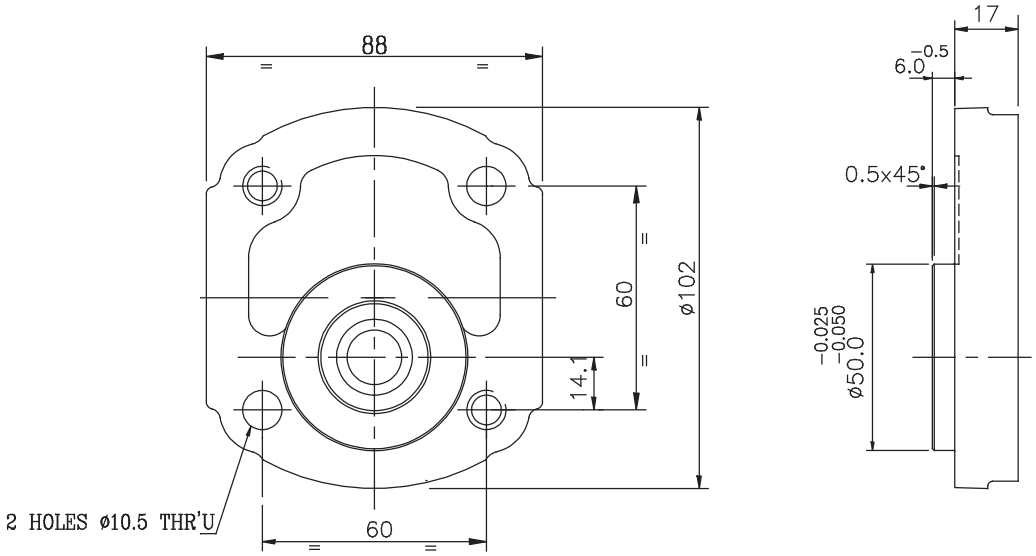

MOUNTING FLANGE CODE - K

2 BOLT MOUNTING ANTI CLOCKWISE ROTATION

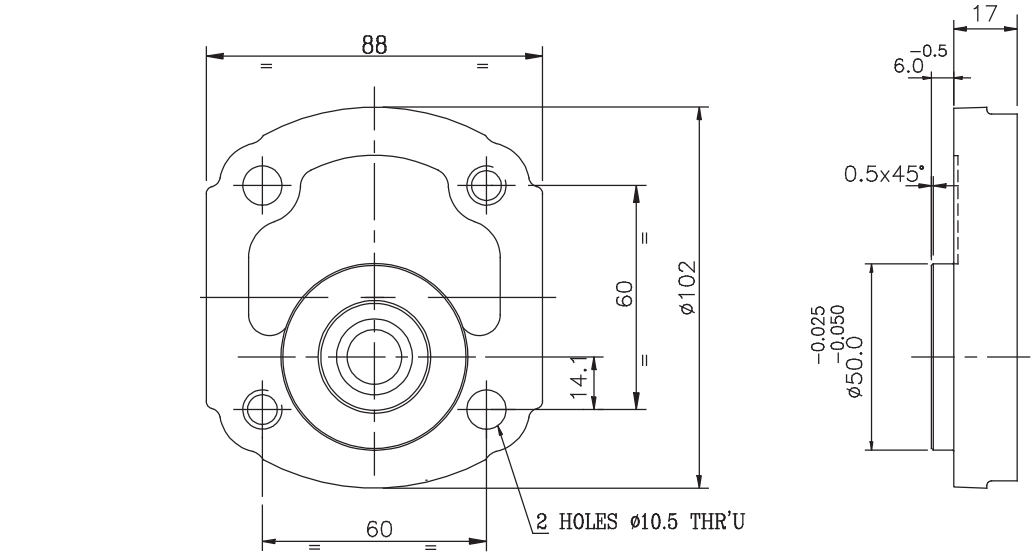

ALL DIMENSIONS ARE IN mm UNLESS OTHERWISE SPECIFIED

MOUNTING FLANGE CODE - S

SAE 2 BOLT MOUNTING

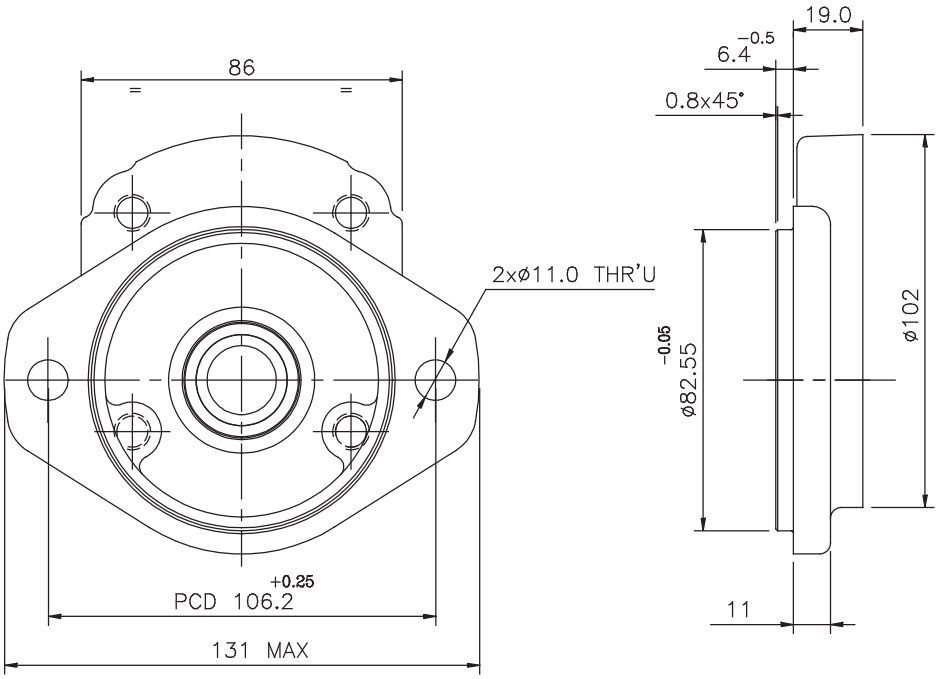

ALL DIMENSIONS ARE IN mm UNLESS OTHERWISE SPECIFIED

BODY PORT CODE - T

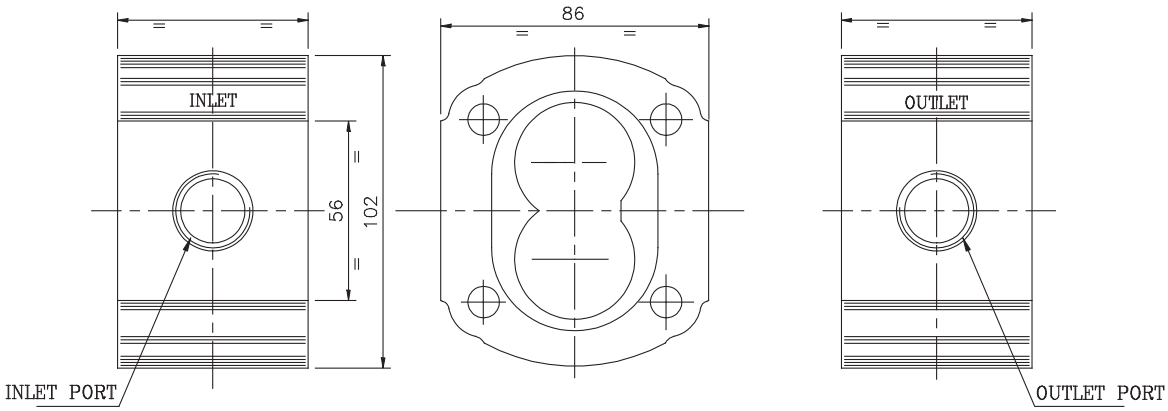

PUMP TYPE	INLET PORT	THREAD DEPTH	OUTLET PORT	THREAD DEPTH
1P 4017	1/2″ BSPF	14.0	1/2″ BSPF	14.0
1P 4020	1/2″ BSPF	14.0	1/2″ BSPF	14.0
1P 4028	1/2″ BSPF	14.0	1/2″ BSPF	14.0
1P 4036	3/4″ BSPF	17.8	1/2″ BSPF	14.0
1P 4044	3/4″ BSPF	17.8	3/4″ BSPF	17.8
1P 4052	3/4″ BSPF	17.8	3/4″ BSPF	17.8
1P 4060	3/4″ BSPF	17.8	3/4″ BSPF	17.8
1P 4072	3/4″ BSPF	17.8	3/4″ BSPF	17.8
1P 4090	3/4″ BSPF	17.8	3/4″ BSPF	17.8

BODY PORT CODE - F

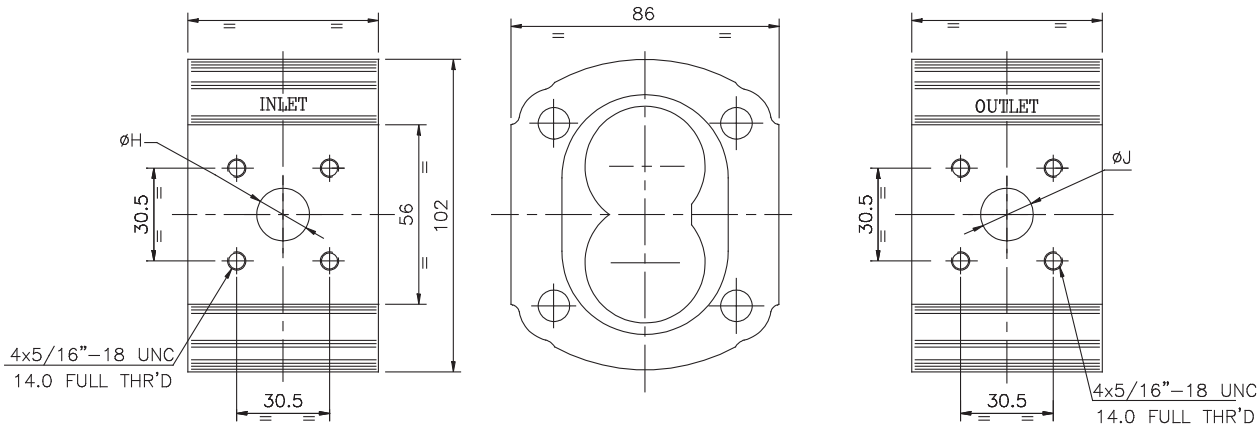

PUMP TYPE	INLET PORT $^{+0.5}_{ØH}$	OUTLET PORT $^{+0.5}_{ØJ}$
1P 4017	17.3	17.3
1P 4020	17.3	17.3
1P 4028	17.3	17.3
1P 4036	17.3	17.3
1P 4044	20.3	20.3
1P 4052	20.3	20.3
1P 4060	20.3	20.3
1P 4072	20.3	20.3
1P 4090	20.3	20.3

ALL DIMENSIONS ARE IN mm UNLESS OTHERWISE SPECIFIED

CONSULT MARKETING FOR MORE FITMENT OPTIONS

BODY PORT CODE - J

SAE O-RING THREADED PORTS (SAE:J 1926/1)

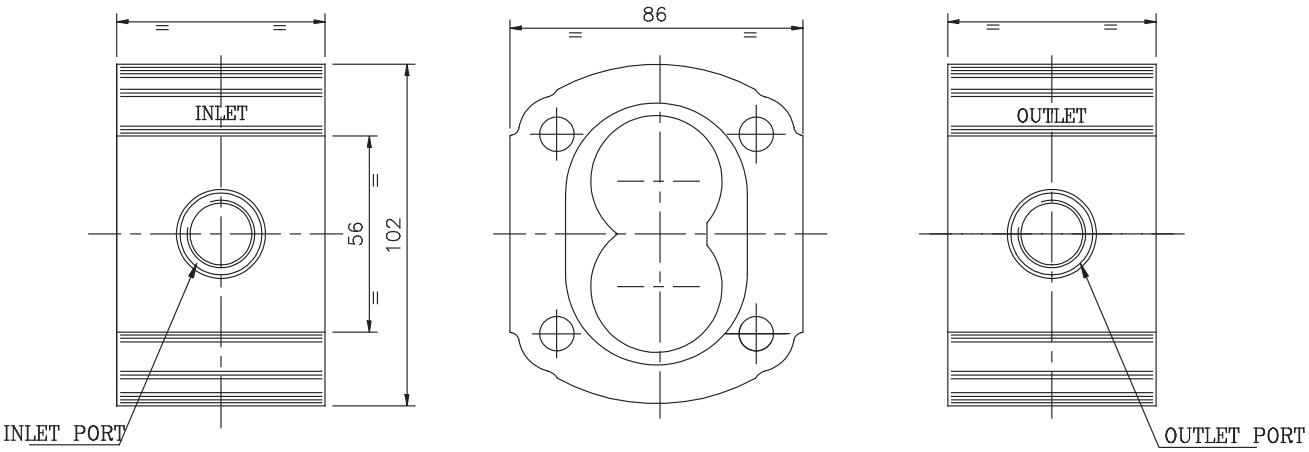

PUMP TYPE	INLET PORT	THREAD DEPTH	OUTLET PORT	THREAD DEPTH
1P 4017	1-1/16″12UN	19	7/8″-14UN	16.5
1P 4020	1-1/16″12UN	19	7/8″-14UN	16.5
1P 4028	1-1/16″12UN	19	7/8″-14UN	16.5
1P 4036	1-1/16″12UN	19	7/8″-14UN	16.5
1P 4044	1-5/16″12UN	19	1-1/16″12UN	19
1P 4052	1-5/16″12UN	19	1-1/16″12UN	19
1P 4060	1-5/16″12UN	19	1-1/16″12UN	19
1P 4072	1-5/16″12UN	19	1-1/16″12UN	19
1P 4090	1-5/16″12UN	19	1-1/16″12UN	19

BODY PORT CODE - S

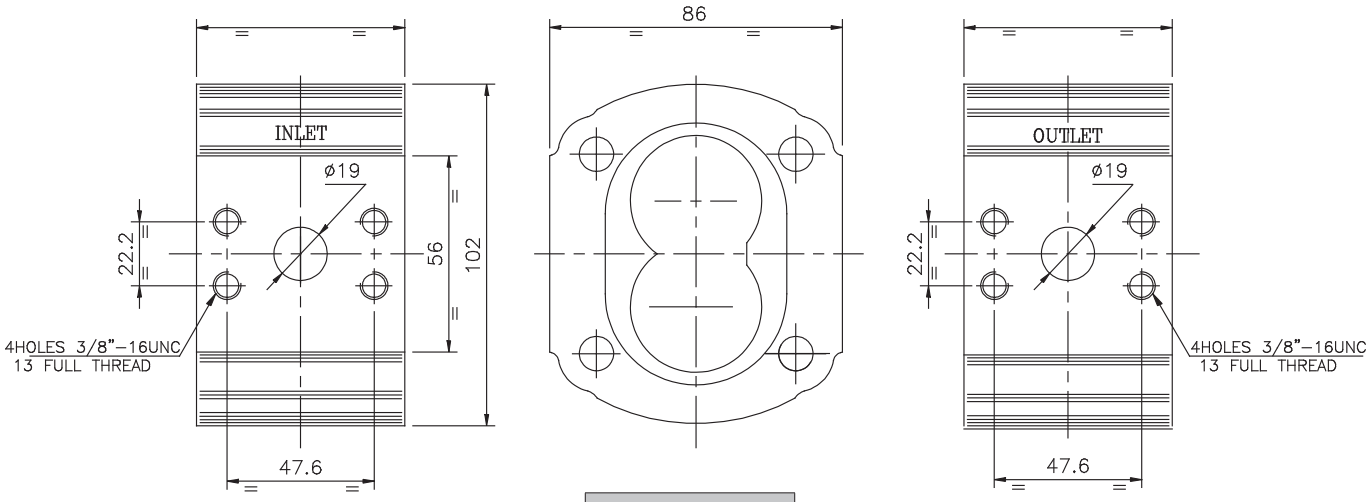

PUMP TYPE
1P 4044
1P 4052
1P 4060
1P 4072
1P 4090

ALL DIMENSIONS ARE IN mm UNLESS OTHERWISE SPECIFIED

CONSULT MARKETING FOR MORE FITMENT OPTIONS

PUMP COVER CODE - A

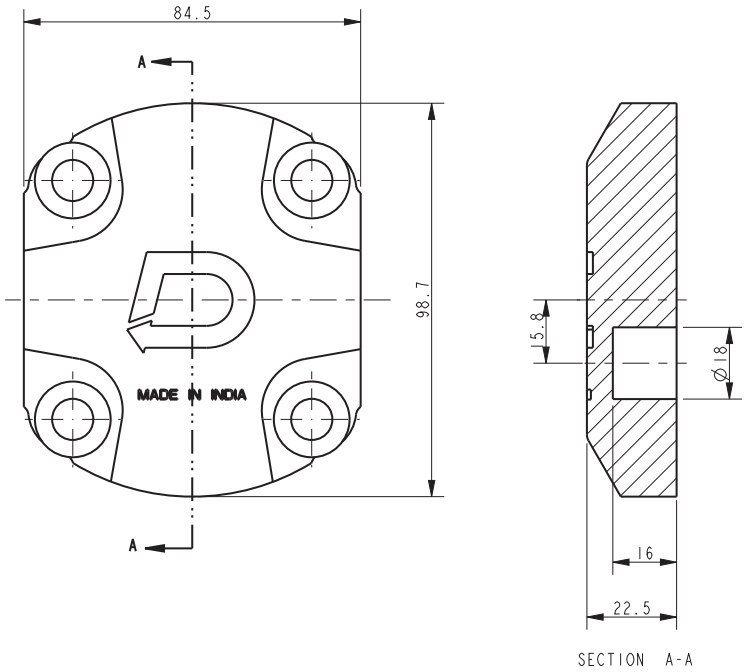

PUMP COVER CODE - B

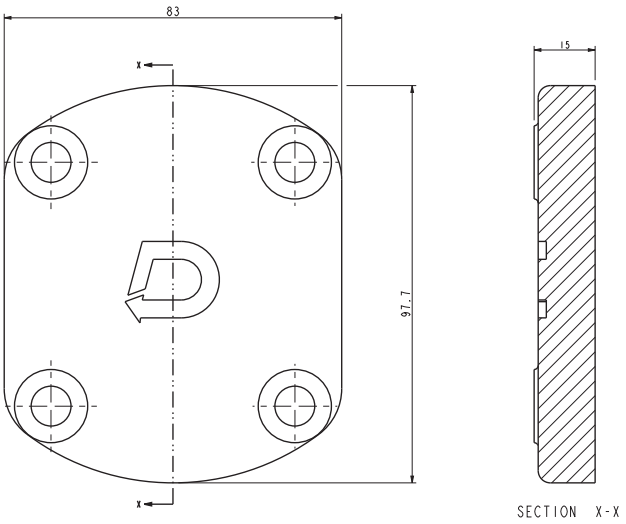

ALL DIMENSIONS ARE IN mm UNLESS OTHERWISE SPECIFIED

HIGH PRESSURE

1DX Series

1DX SERIES HYDRAULIC GEAR PUMP

The HIGH PRESSURE 1DX SERIES of Dynamatic gear pumps, have been designed to specifically meet the demanding needs of modern high performance hydraulic systems. The 1DX series has optimized twelve teeth gears. They offer high-pressure rating, combined with low pressure-ripples and low-noise characteristics. The extensive range of displacements available provides close matching for a wide variety of applications.

The Salient features of the 1DX Series of pumps are detailed below.

- Twelve teeth gear design.
- Low pressure ripple / system noise.
- Feasibility of common inlet ports, for multiple unit configuration.
- Rear (cover) mounted ports available.
- Available in Single, Double & Triple Tandem pump configuration.

Pump Sizes: The 1DX Series of Pumps are available in sizes ranging from 4.5 to 28 cc per rev.

High Pressure: The 1DX Series of pumps have capability to withstand a maximum continuous operating pressure of 250 bar, to meet exacting requirements.

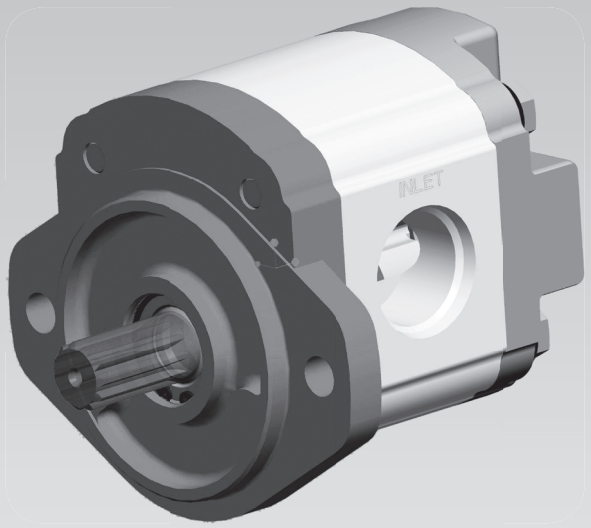

Quality: The use of statistical process control techniques during all phases of manufacturing, ensures the use of high quality and accurate components. All pumps in the 1DX series, are performance tested to achieve total quality.

Options: The 1DX Series includes various shaft types viz. parallel, taper and spline and also various types of mounting flanges, which provide optimum flexibility in connecting to the power source of the equipment.

PREFERRED DIRECTION OF EXTERNAL LOADING ON THE PUMP SHAFT

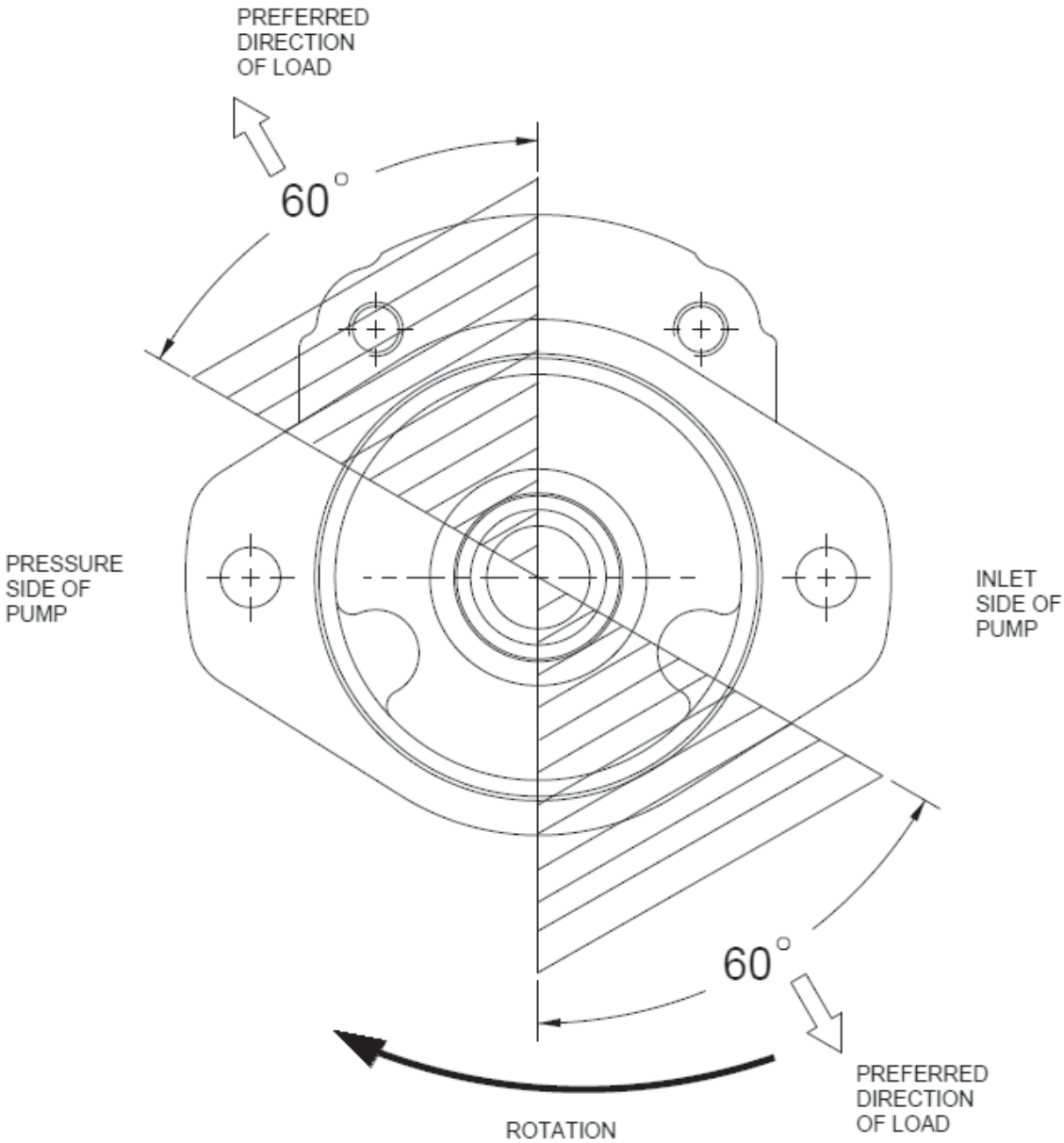

ALL DIMENSIONS ARE IN mm UNLESS OTHERWISE SPECIFIED

PERFORMANCE DATA

Pump Type	Theoretical Displacement	Maximum Continuous Pressure P1*		Speed at P1 rpm		Typical Delivery at 1500 rpm at P1**	
	cc/rev	bar	psi	Min	Max	Max (lpm)	Min (lpm)
1DX045	4.5	250	3625	700	3500	6.8	5.8
1DX060	6	250	3625	700	3500	9	8.2
1DX070	7	250	3625	700	3500	10.5	9.6
1DX085	8.5	250	3625	700	3500	12.8	11.8
1DX100	10	250	3625	700	3500	15	14.0
1DX120	12	250	3625	700	3500	18	16.9
1DX140	14	250	3625	700	3500	21	19.9
1DX170	17	250	3625	700	3500	25.5	24.3
1DX195	19.5	250	3625	700	3250	29.3	27.9
1DX210	21	250	3625	700	3000	31.5	30.2
1DX230	23	230	3336	700	2750	34.5	33.1
1Dx250	25	210	3045	700	2750	37.5	35.9
1DX285	28.5	190	2755	700	2250	42.8	40.9

* Pressure quoted is relief valve maximum pressure
** Typical delivery at maximum continuous pressure while using with SAE VG 68 grade oil at 50°C temperature.

1DX PUMP PERFORMANCE GRAPH

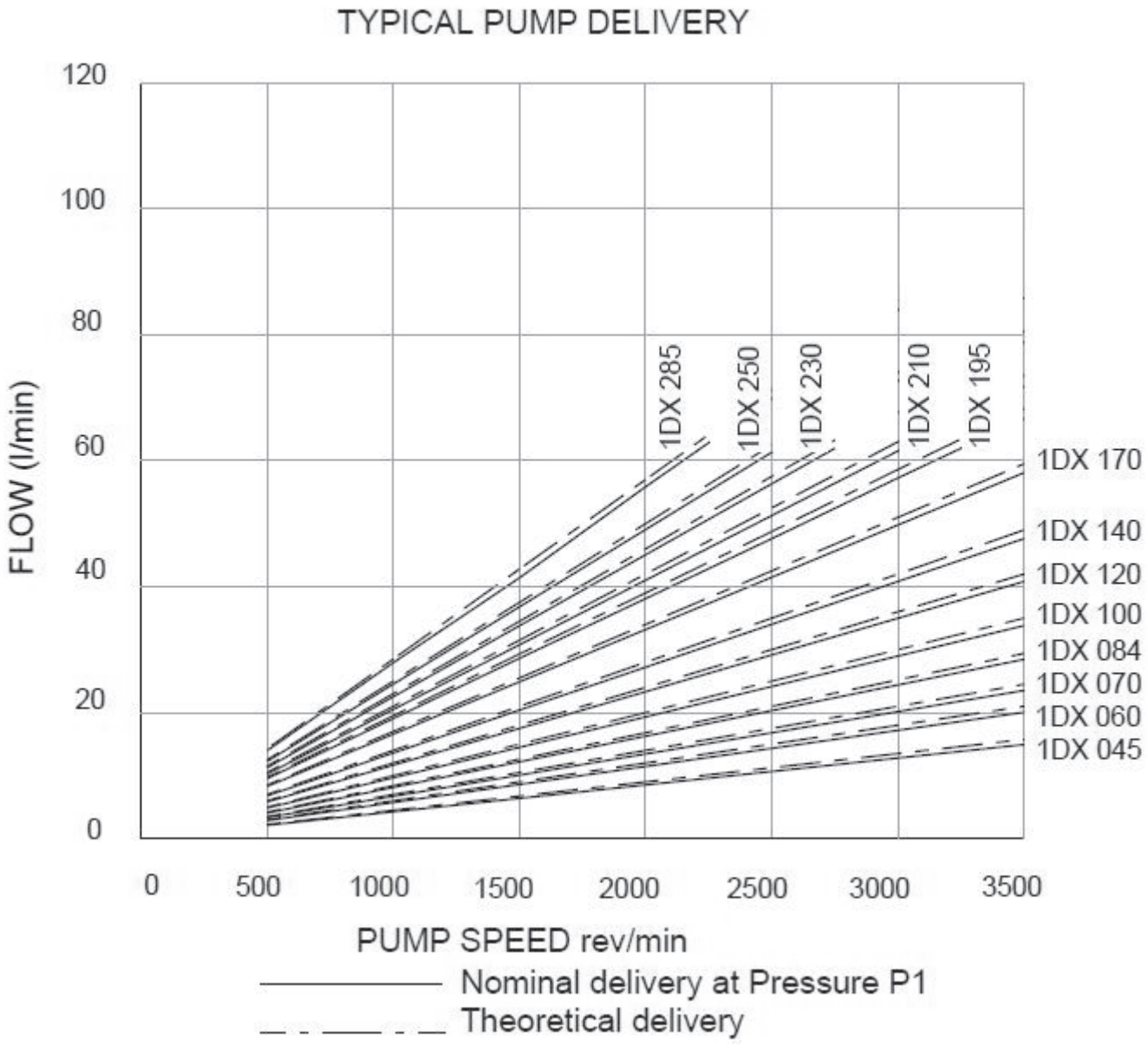

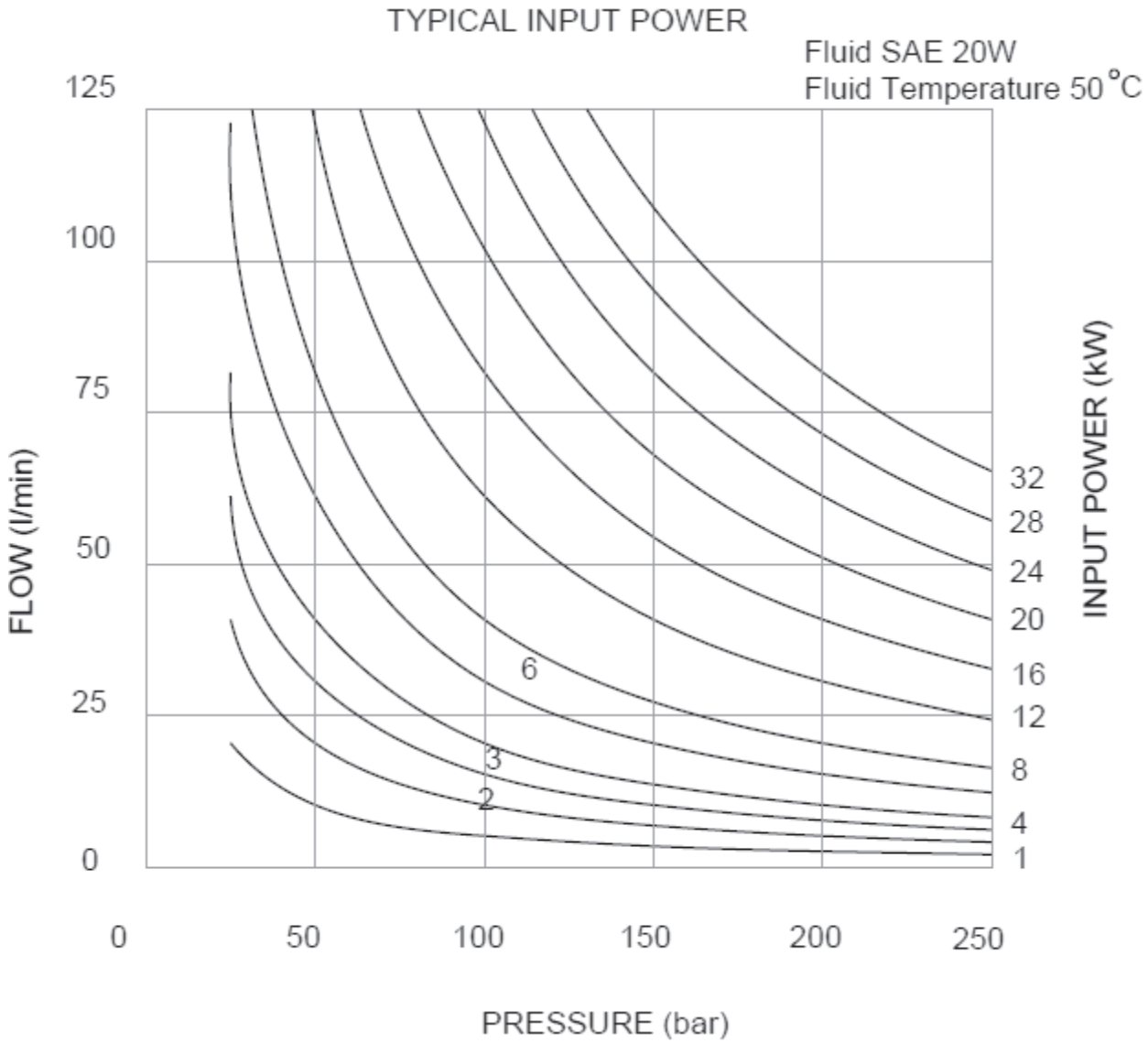

1DX PUMP CODIFICATION

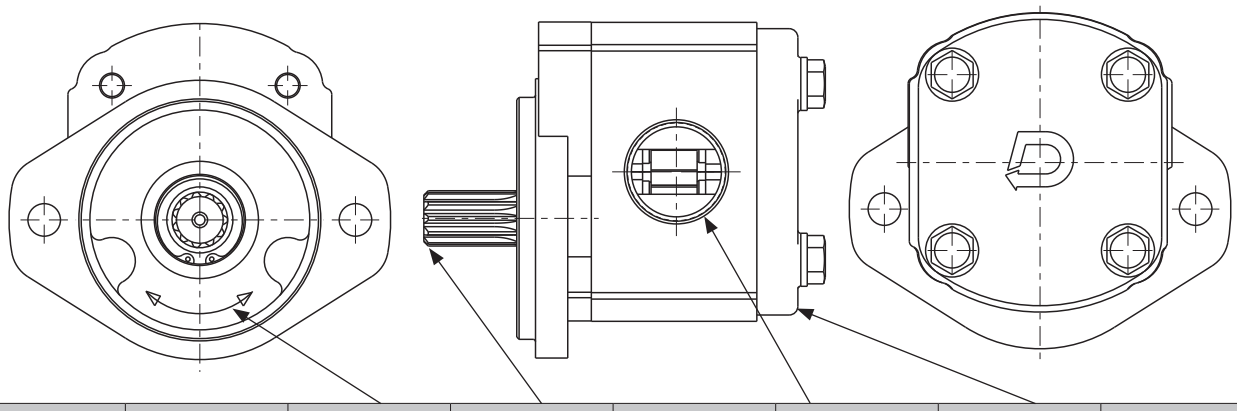

FRAME	FIOW	ROTATION	SHAFT	FLANGE	BOOY PORT	COVER	SHAFT SEAL
1DX	---	---	---	---	---	---	---

FIOW		ROTATION		SHAFT CODE		FLANGE		BODY COOE		COVER		SEAL	
DISPLACEMENT CC/Rev	PUMP MODEL	A	ANTI CLOCKWISE	P	SAE PARALLEL	S	SAE 2 BOLTS	J	THREADED J PORT	B	STANDARD	N	NITRILE
4.5	045	C	CLOCKWISE	L	L SHAFT	K	K-TYPE	T	THREADED T PORT			V	VITON
6.0	060			K	K-TYPE			F	FLANGE TYPE PORT			G	2-NITRILE
7.0	070			T	TAPER SHAFT							W	2-VITON
8.4	084			S	SAE, 9T SPLINED								
10.0	100			H	SAE, 10T SPLINED								
12.0	120			G	SAE, 11T SPLINED								
14.0	140												
17.0	170												
19.5	195												
21.0	210												
23.0	230												
25.0	250												
28.5	285												

1DX PUMP INSTALLATION DIMENSIONS

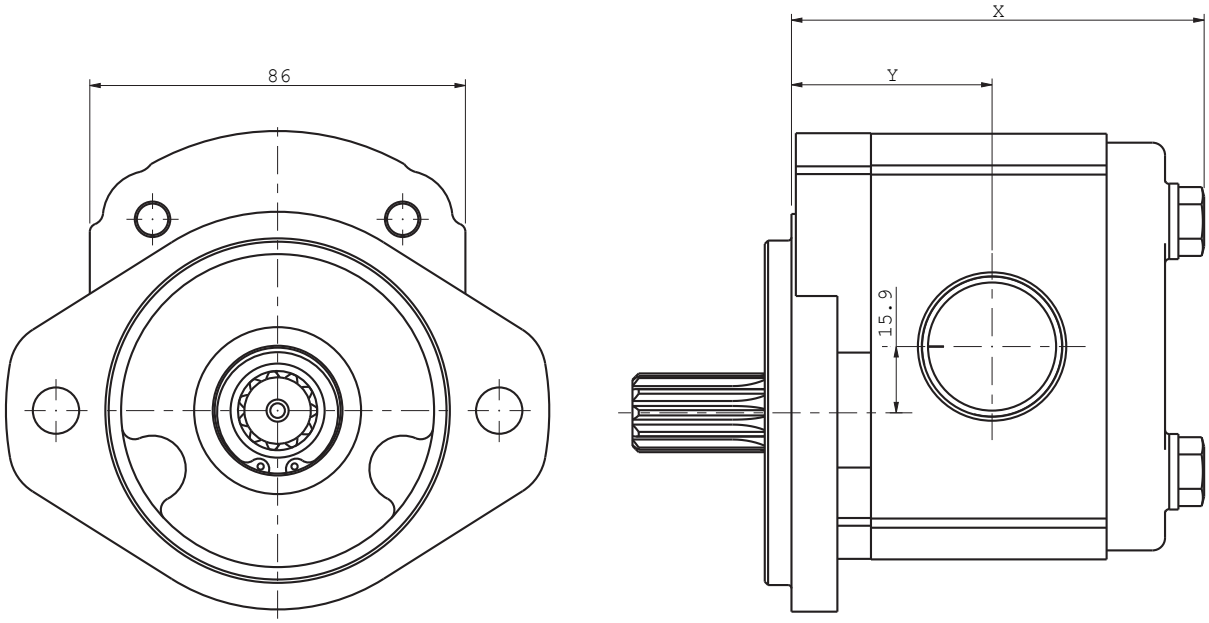

PUMP TYPE	Dim.'Y'	Dim.'X'
1DX045	43.0	90
1DX060	44.1	92.2
1DX070	44.9	93.8
1DX084	46.0	96.0
1DX100	47.3	98.6
1DX120	48.9	101.8
1DX140	50.5	105
1DX170	58.3	120.6
1DX195	60.2	124.4
1DX210	61.4	126.8
1DX230	63.0	130
1DX250	64.6	133.2
1DX285	67.3	138.6

ALL DIMENSIONS ARE IN mm UNLESS OTHERWISE SPECIFIED

SHAFT CODE

SHAFT CODE - P

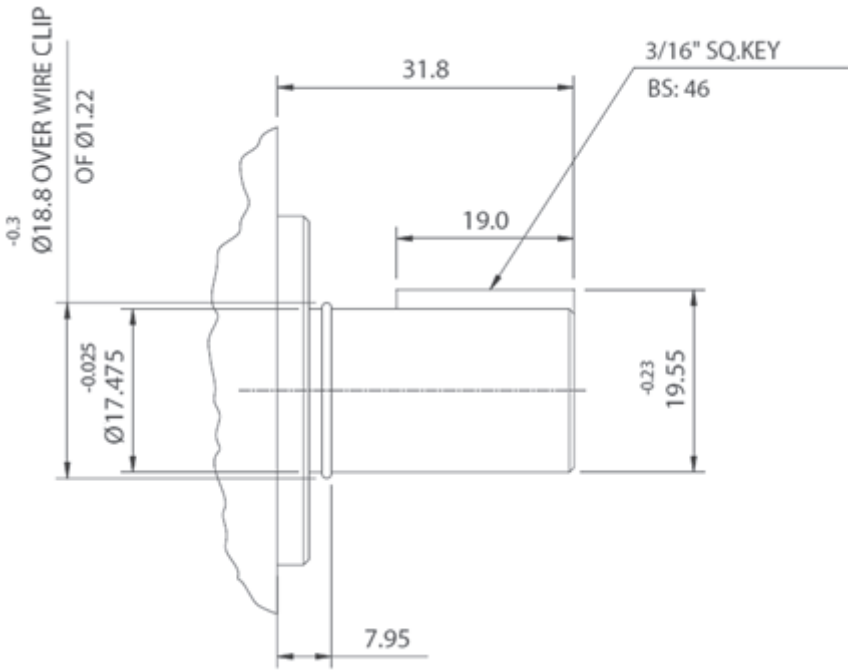

SHAFT CODE - L

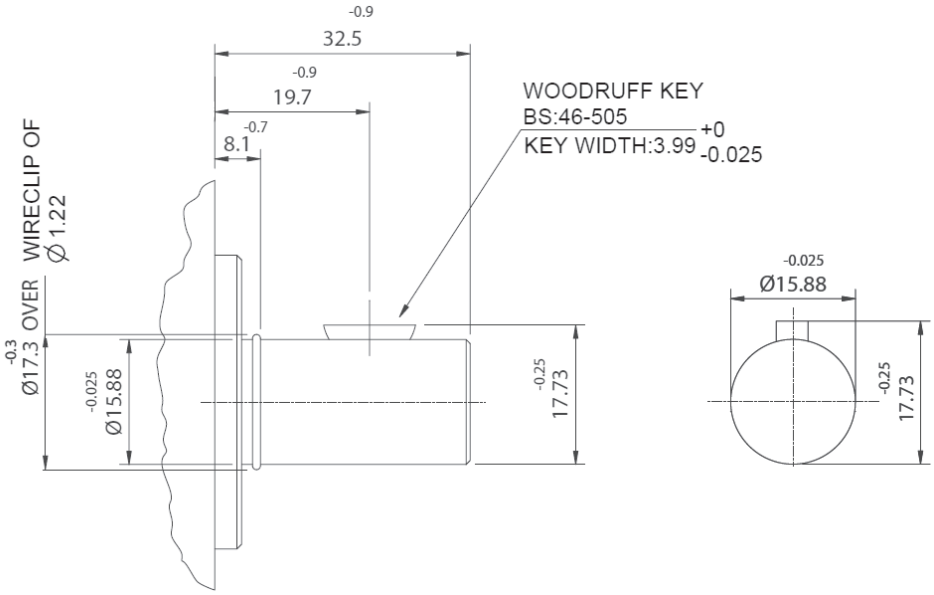

ALL DIMENSIONS ARE IN mm UNLESS OTHERWISE SPECIFIED

SHAFT CODE - T

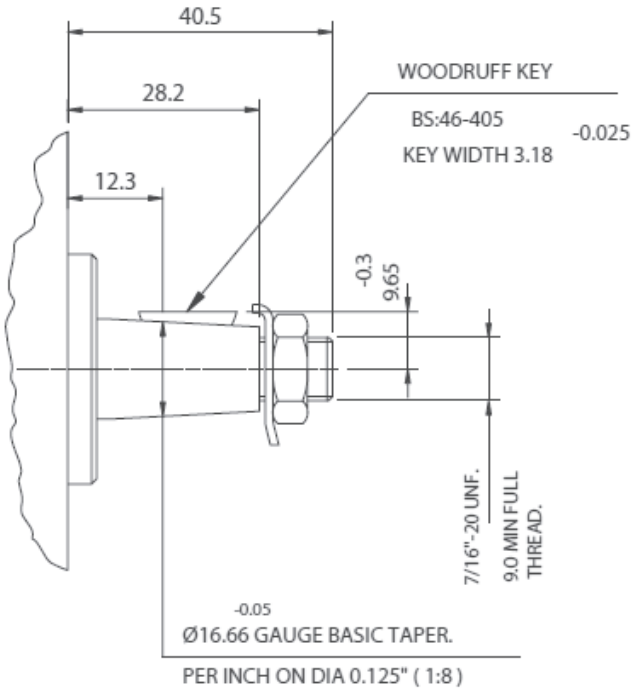

ALL DIMENSIONS ARE IN mm UNLESS OTHERWISE SPECIFIED

SHAFT CODE - K

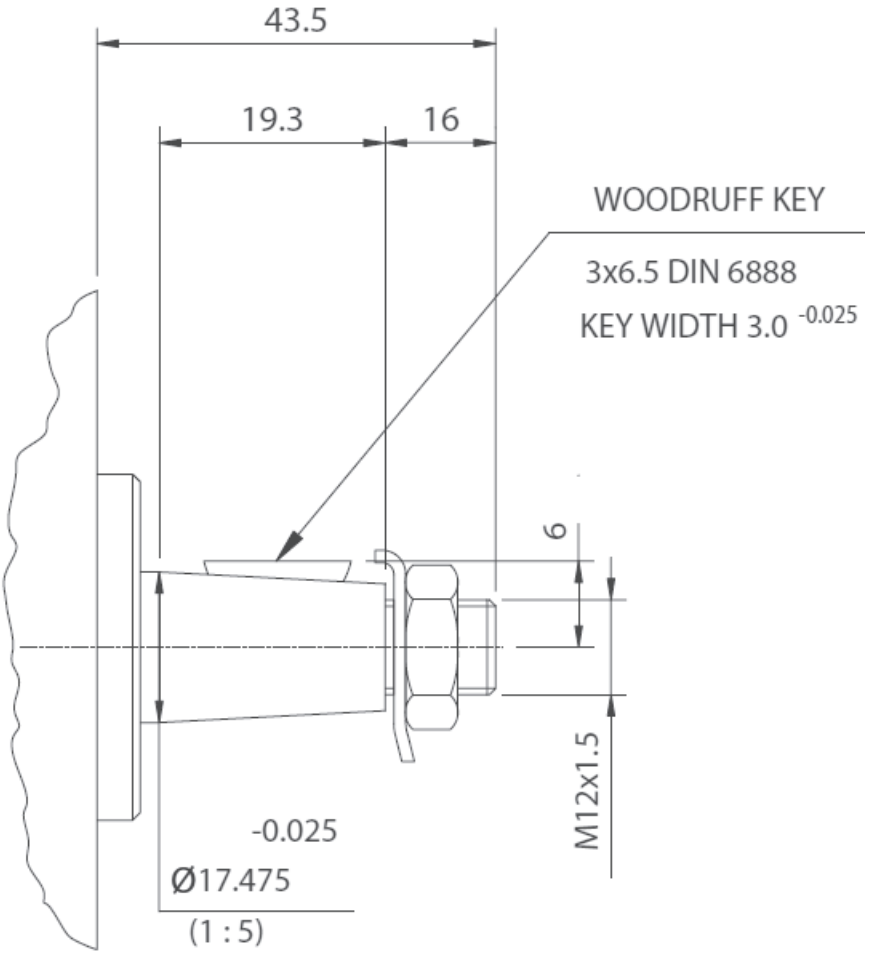

ALL DIMENSIONS ARE IN mm UNLESS OTHERWISE SPECIFIED

SHAFT CODE - S

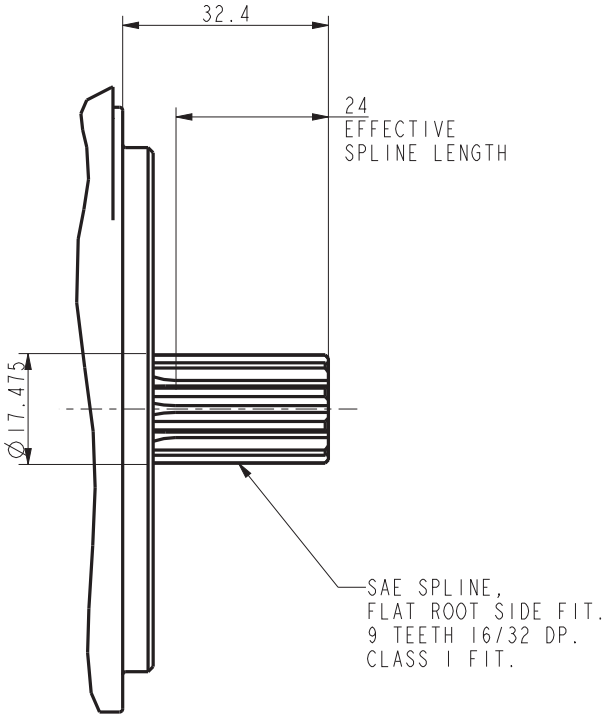

SHAFT CODE - G

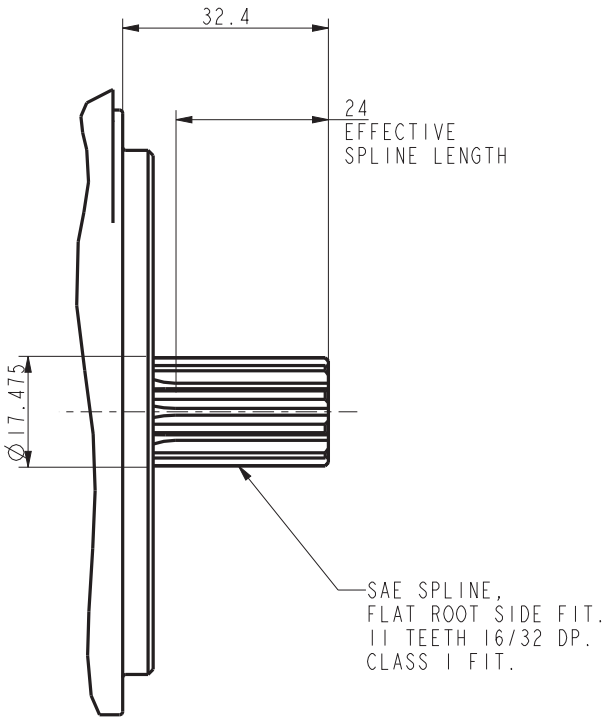

ALL DIMENSIONS ARE IN mm UNLESS OTHERWISE SPECIFIED

MOUNTING FLANGE CODE - S

SAE 2 BOLTS

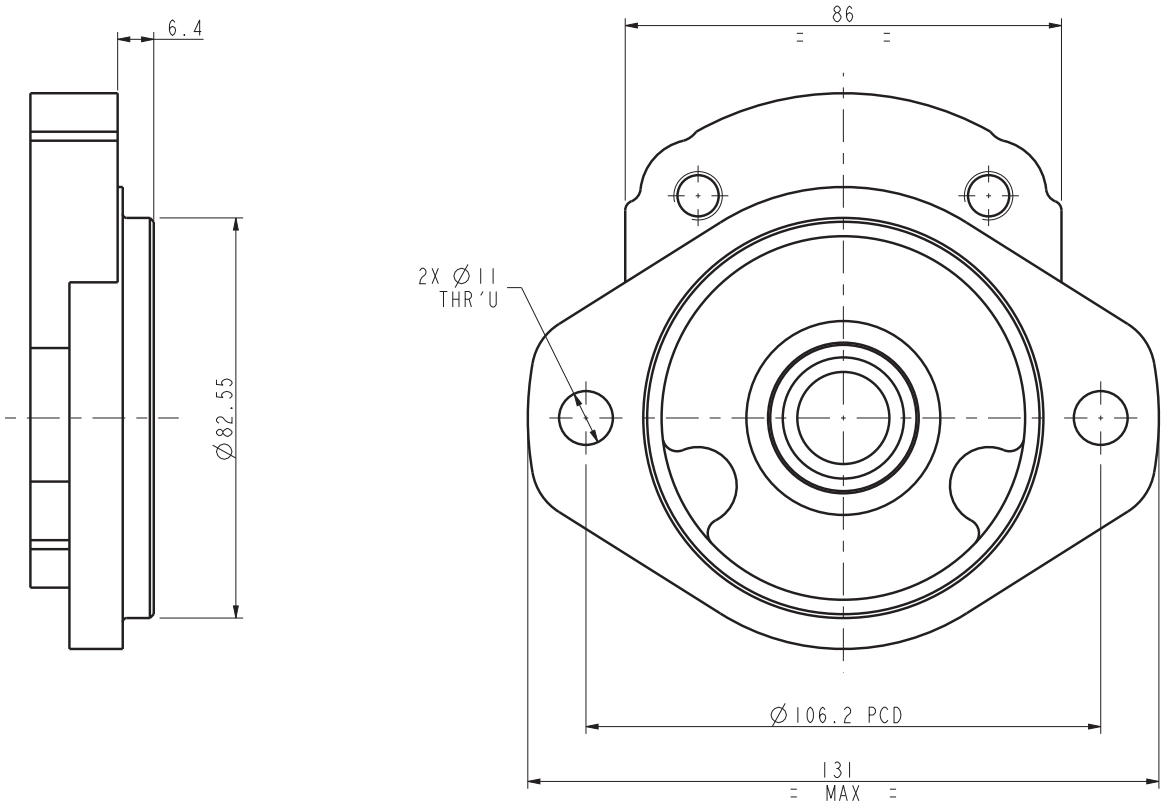

ALL DIMENSIONS ARE IN mm UNLESS OTHERWISE SPECIFIED

MOUNTING FLANGE CODE - K
(FOR ANTI CLOCKWISE DIRECTION)*

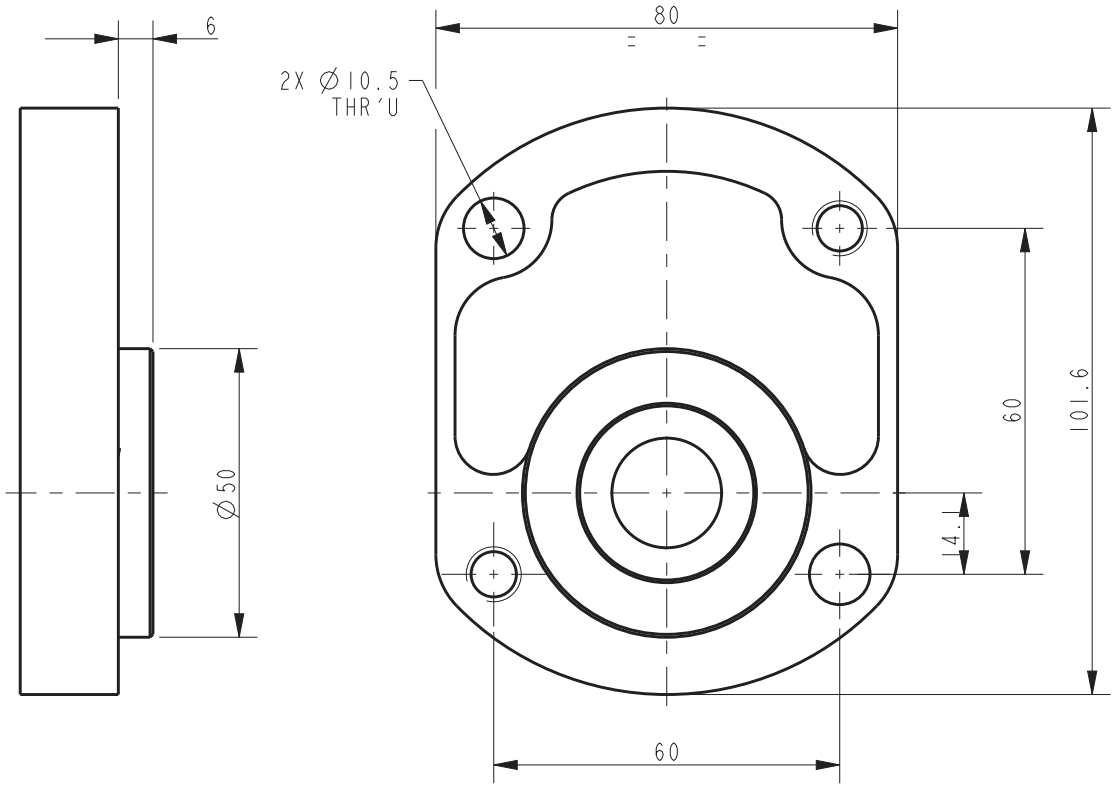

*FOR CLOCKWISE DIRECTION, THE POSTION OF THROUGH HOLES & TAPPED HOLES ARE TO BE INTERCHANGED

ALL DIMENSIONS ARE IN mm UNLESS OTHERWISE SPECIFIED

Available Body Port Details for different flows:

SL.NO	PUMP CAPACITY	PORT TYPES	
		CODE-T	CODE-J
1	1DX045 TO 1DX100		
	INLET	1/2"-BSP	1-1/16''-12 UN
	OUTLET	1/2"-BSP	7/8''-14 UNF
2	1DX120 TO 1DX285		
	INLET	3/4"-BSP	1-5/16"-12 UN
	OUTLET	3/4"-BSP	1-1/16''-12 UN

BODY PORT CODE - T

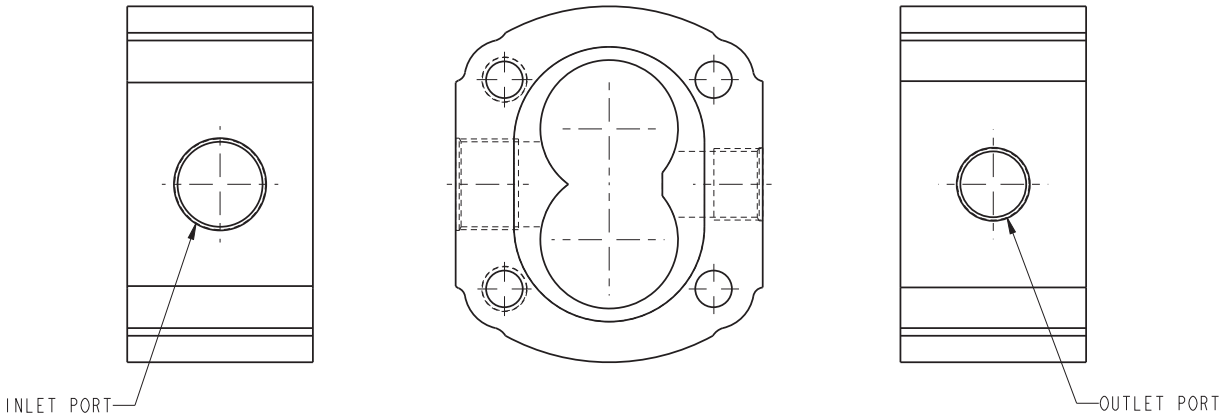

BODY PORT CODE - J

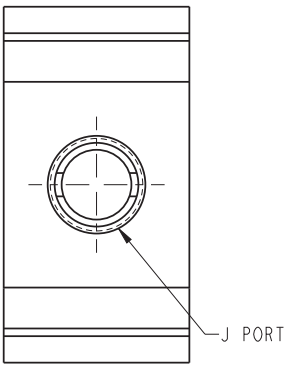

BODY PORT CODE - F

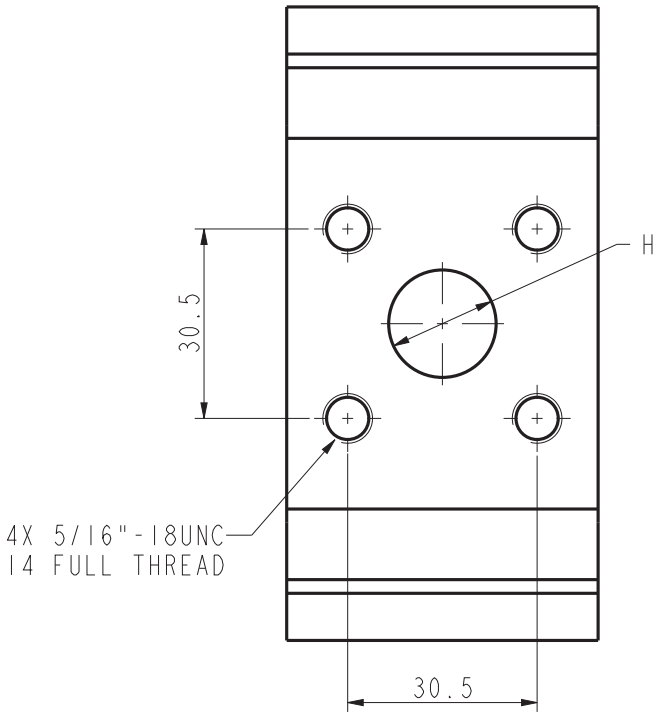

SL. NO.	PUMP CAPACITY	DIA:H$^{+0.1}$
1	FOR 1DX045 TO 1DX100	17.3
2	FOR 1DX120 TO 1DX285	20.3

*INLET & OUTLET PORTS ARE IDENTICAL

ALL DIMENSIONS ARE IN mm UNLESS OTHERWISE SPECIFIED

END COVER PLATE CODE - B

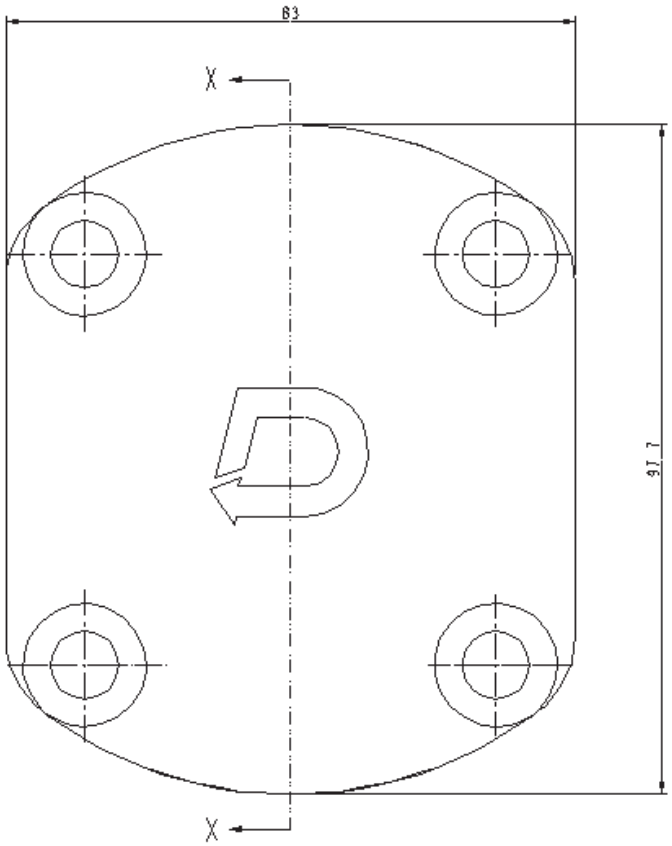

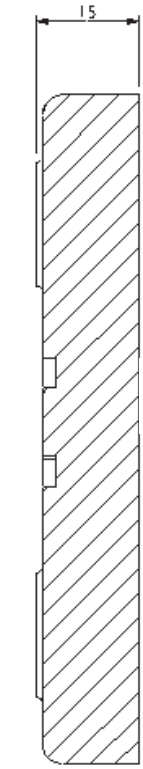

ALL DIMENSIONS ARE IN mm UNLESS OTHERWISE SPECIFIED

PERFORMANCE DATA

Pressures quoted are relief valve maximum by-pass
Performance with SAE 20W oil at 50˚C

PUMP TYPE	DISPLACEMENT	DELIVERY @1500 RPM & PRESSURE P		MAXIMUM CONTINUOUS PRESSURE P		SPEED AT MAXIMUM CONTINUOUS PRESSURE P	
	cc/rev	MIN (lpm)	MAX (lpm)	psi	bar	MAX	MIN
3050	16.67	21.8	25	3000	207	3000	700
3070	22.73	30.7	34	3000	207	3000	700
3090	28.79	39.4	43.2	3000	207	3000	700
3105	33.34	45.8	50	3000	207	3000	700
3120	37.88	52.3	56.8	3000	207	3000	700
3146	45.46	63.8	68.2	2525	174	2500	700
3158	49.40	68.9	74.1	2525	174	2500	700
3220	68.8	96	103.2	2000	138	2500	700

TYPICAL PERFORMANCE

TYPICAL PUMP DELIVERY
Flow at Max. Pressure

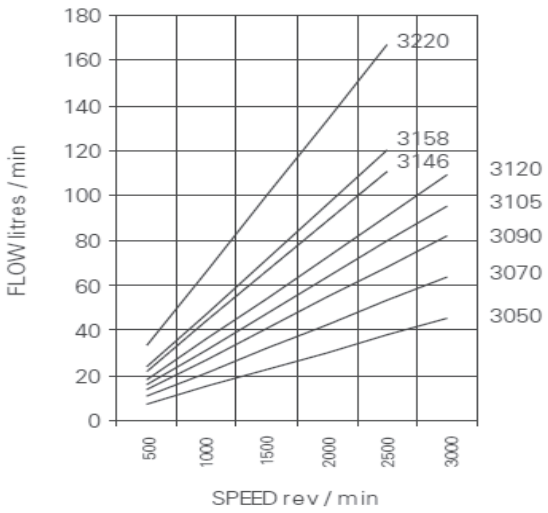

TYPICAL INPUT HORSEPOWER
Fluid SAE 20W
Fluid Temperature 50˚C

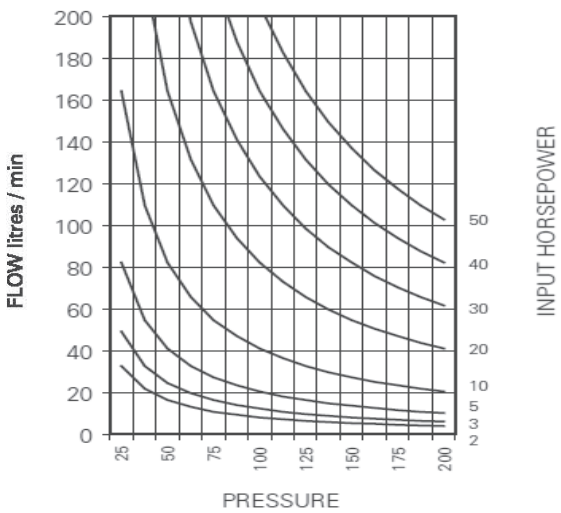

INSTALLATION DIMENSIONS

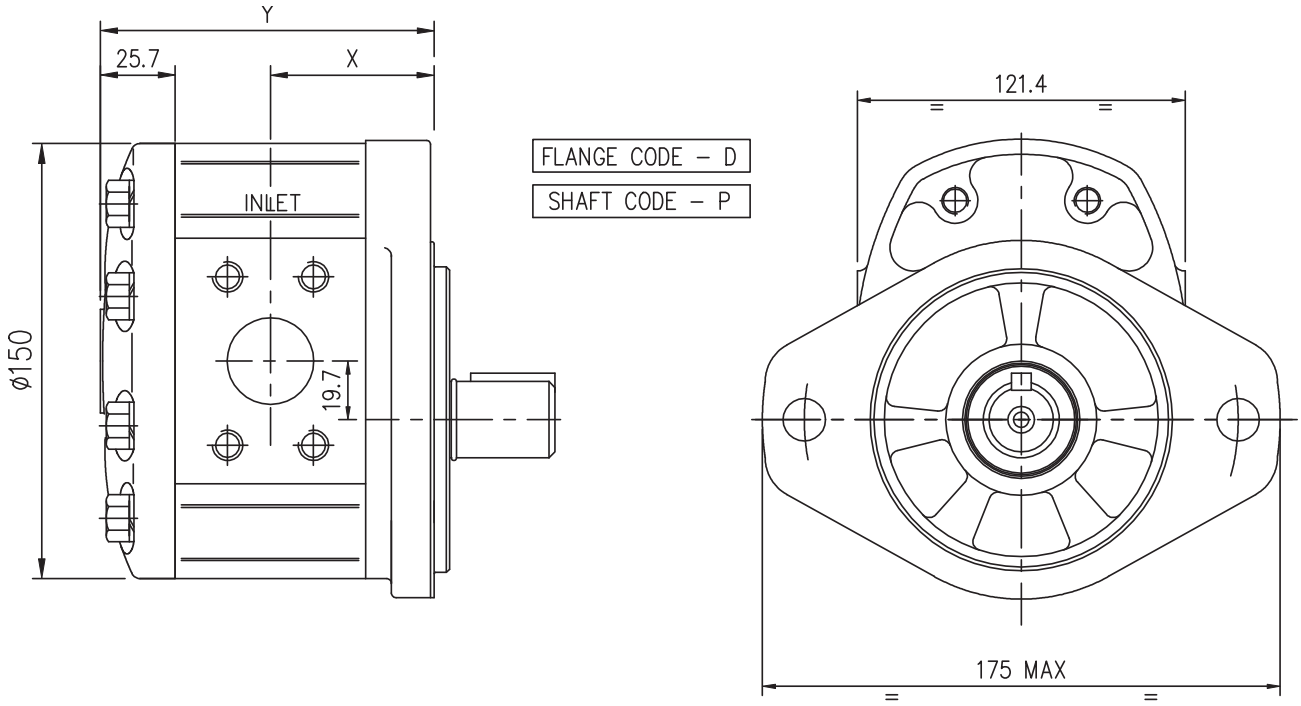

PUMP TYPE	DIMENSIONS	
	X	Y
2P-3050	54.3	112.7
2P-3070	56.7	117.5
2P-3090	59.1	122.3
2P-3105	67.9	139.8
2P-3120	69.7	143.5
2P-3146	72.7	149.6
2P-3158	74.3	152.7
2P-3220	81.7	167.5

NOTE:

- The representation for the pump assembly drawing is for anti-clockwise direction of shaft rotation as viewed from pump drive shaft end. For clockwise rotation of pump shaft, the position of inlet & outlet ports will interchange.
- Unless otherwise specified, the dimension 'X' is identical for both inlet & outlet port positions

ALL DIMENSIONS ARE IN mm UNLESS OTHERWISE SPECIFIED

DRIVE SHAFT CODE - P

FLANGE CODE: D & S

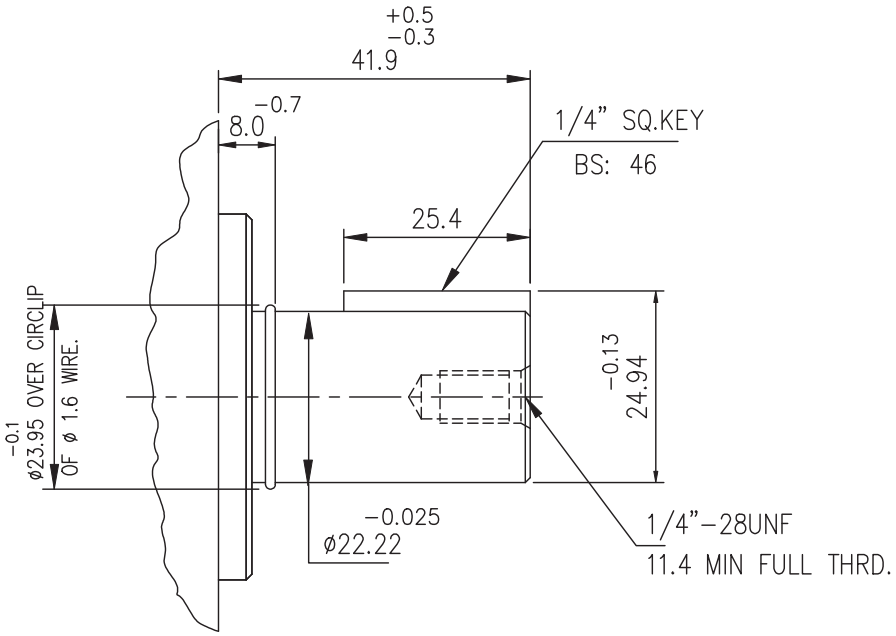

DRIVE SHAFT CODE - T

FLANGE CODE: D & S

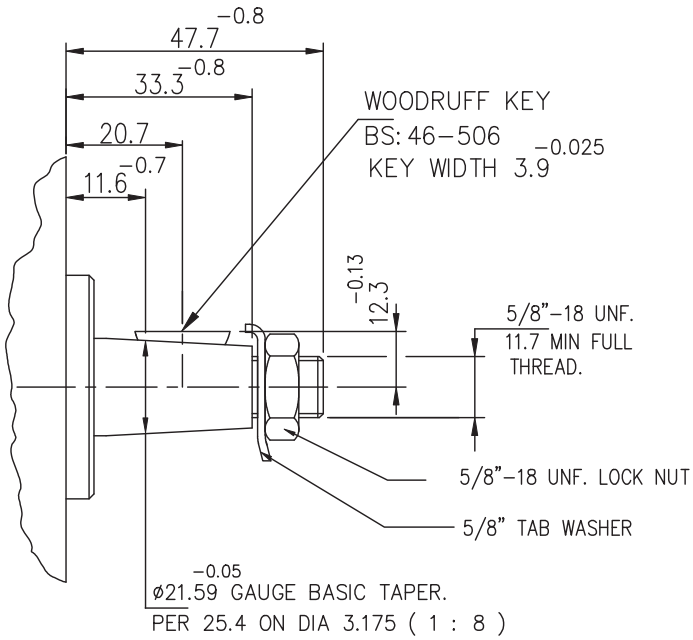

ALL DIMENSIONS ARE IN mm UNLESS OTHERWISE SPECIFIED

DRIVE SHAFT CODE - S

FLANGE CODE: D & S

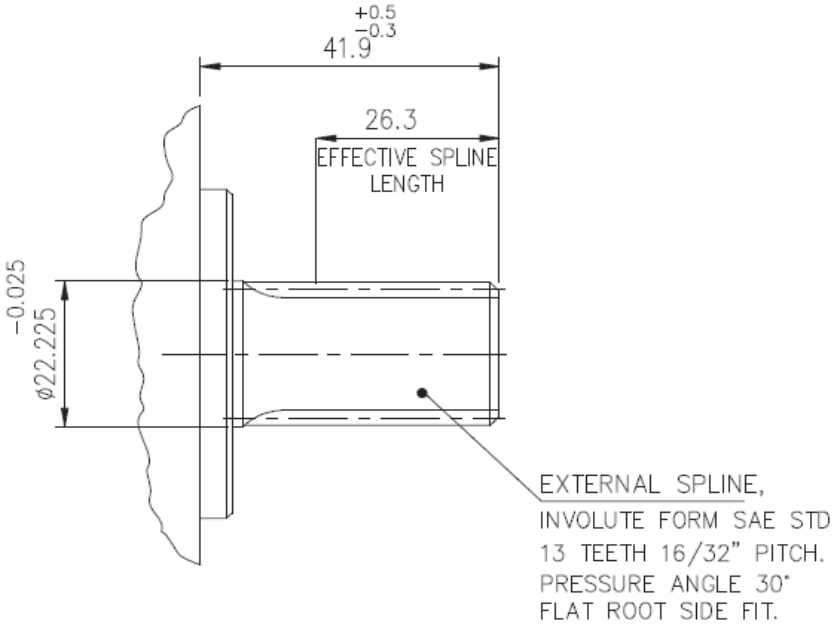

ALL DIMENSIONS ARE IN mm UNLESS OTHERWISE SPECIFIED

BODY PORT CODE - J

SAE O-RING THREADED PORTS (SAE:J1926/1)

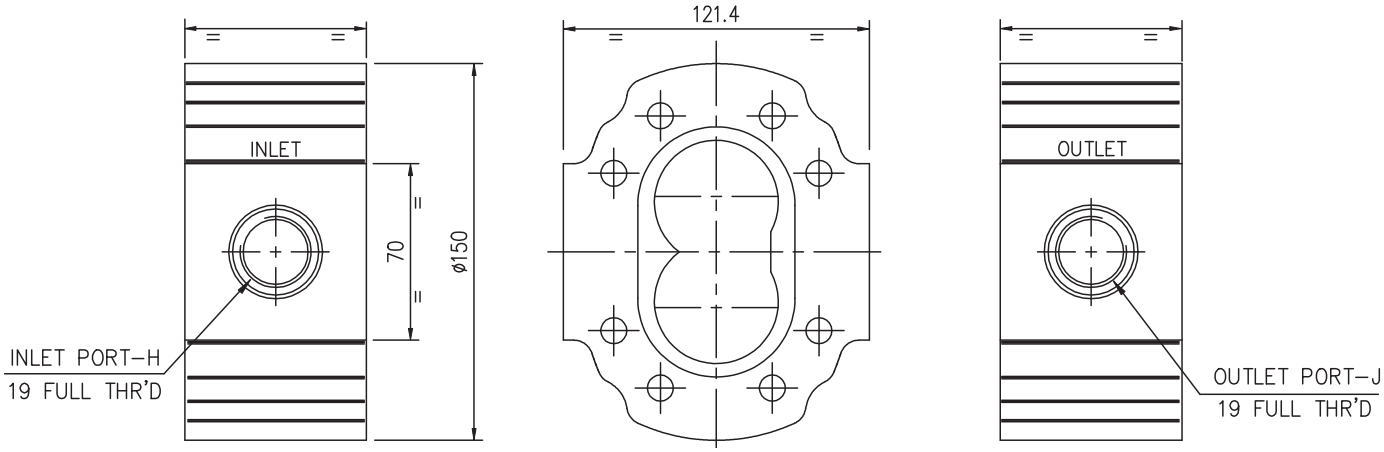

PUMP TYPE	IINLET PORT-H	OUTLET PORT-J
2P 3050	1-5/16"12UN	1-1/16"12UN
2P 3070	1-5/16"12UN	1-1/16"12UN
2P 3090	1-5/8"12UN	1-5/16"12UN
2P 3105	1-5/8"12UN	1-5/16"12UN
2P 3120	1-5/8"12UN	1-5/16"12UN
2P 3146	1-5/8"12UN	1-5/16"12UN
2P 3158	1-5/8"12UN	1-5/16"12UN
2P 3220	1-5/8"12UN	1-5/16"12UN

BODY PORT CODE - S

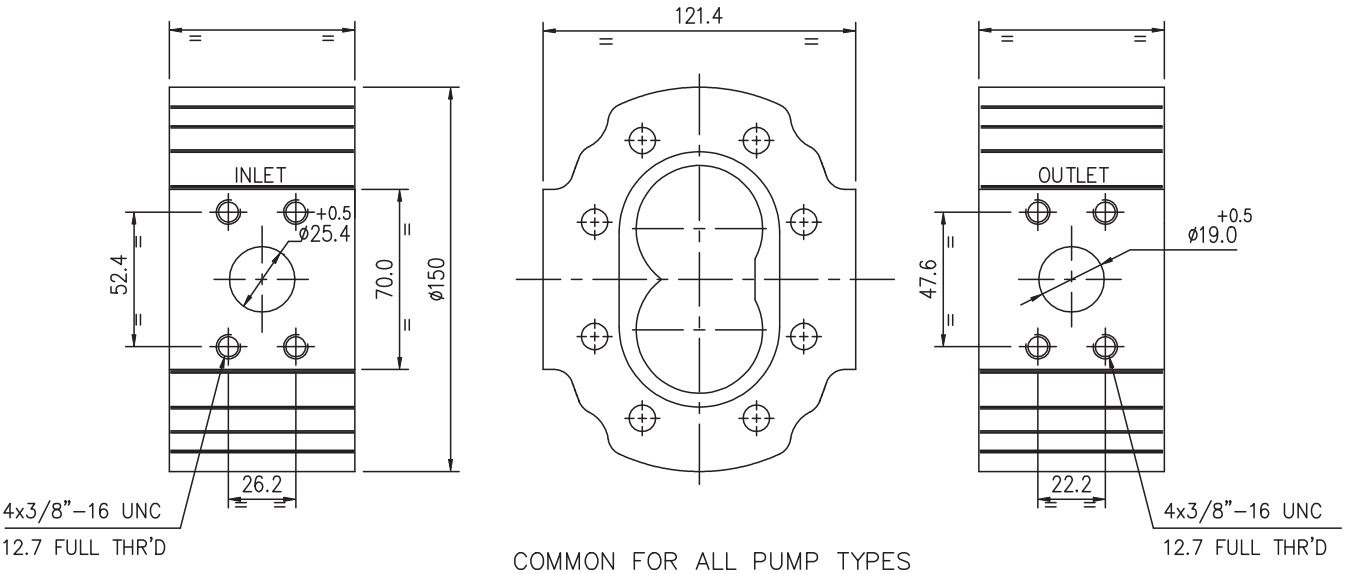

ALL DIMENSIONS ARE IN mm UNLESS OTHERWISE SPECIFIED

CONSULT MARKETING FOR MORE FITMENT OPTIONS

BODY PORT CODE - T

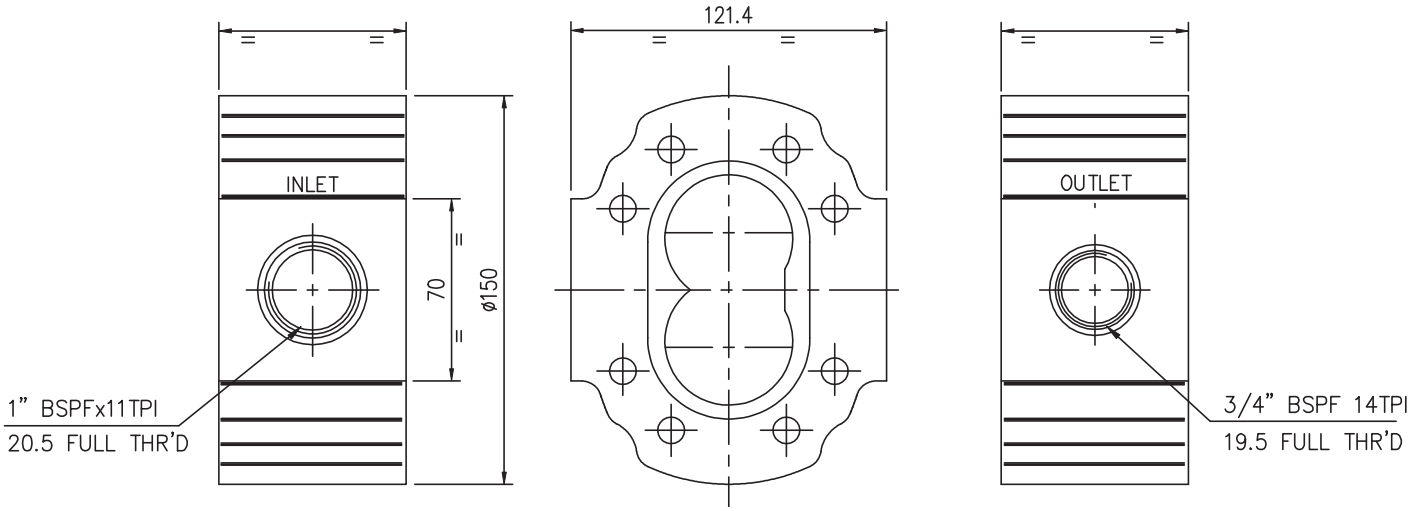

BODY PORT CODE - F

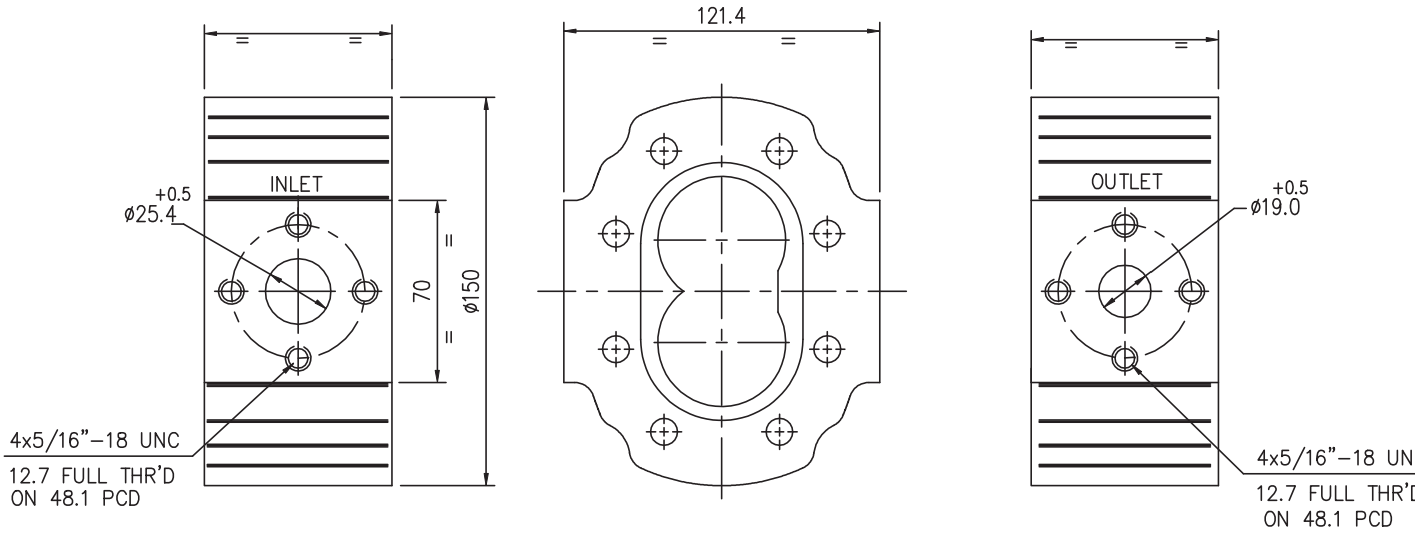

ALL DIMENSIONS ARE IN mm UNLESS OTHERWISE SPECIFIED

CONSULT MARKETING FOR MORE FITMENT OPTIONS

BODY PORT CODE - V

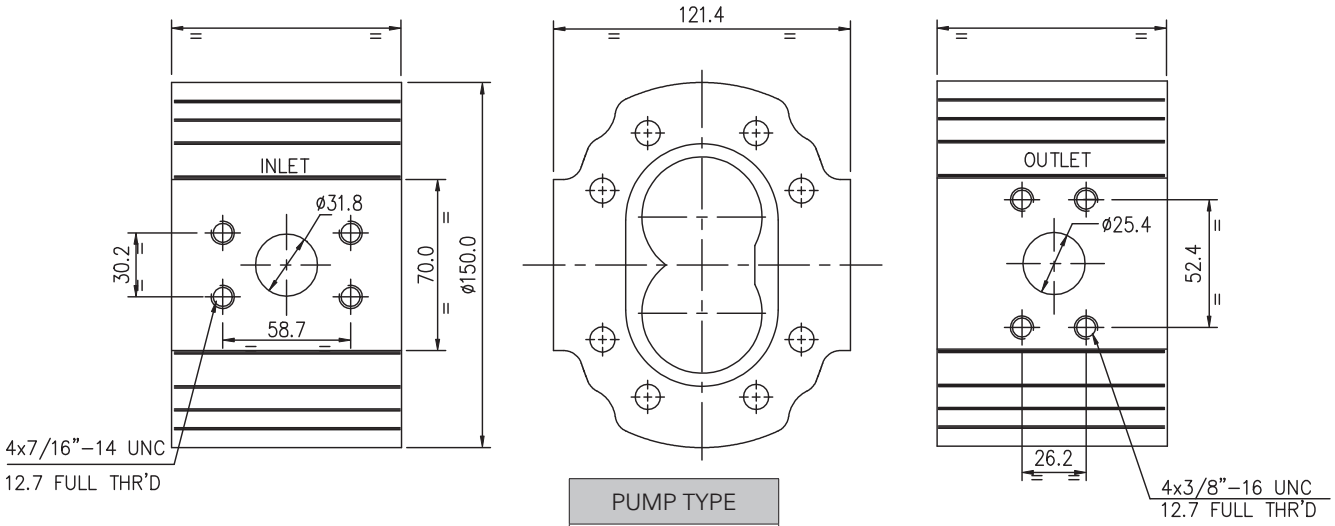

PUMP TYPE
2P 3105
2P 3120
2P 3146
2P 3158
2P 3180
2P 3200
2P 3220

BODY PORT CODE - Z

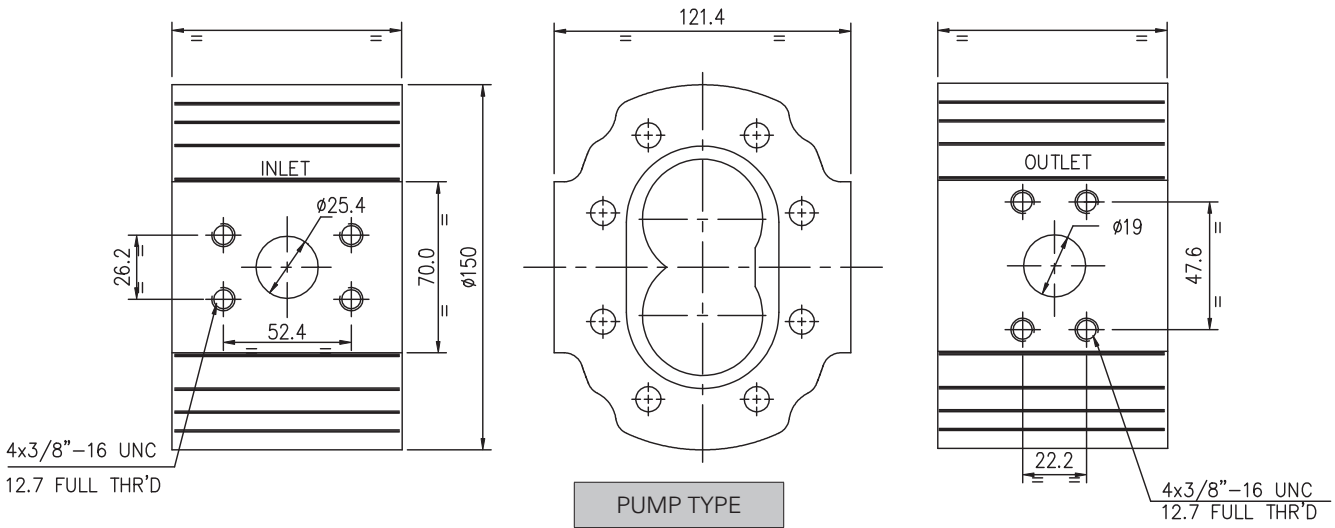

PUMP TYPE
2P 3090
2P 3105
2P 3120
2P 3146
2P 3158
2P 3180
2P 3200
2P 3220

ALL DIMENSIONS ARE IN mm UNLESS OTHERWISE SPECIFIED

CONSULT MARKETING FOR MORE FITMENT OPTIONS

MOUNTING FLANGE CODE - X

DRIVE SHAFT CODE -Q, QUILL ADAPTER ASSEMBLY (K2)

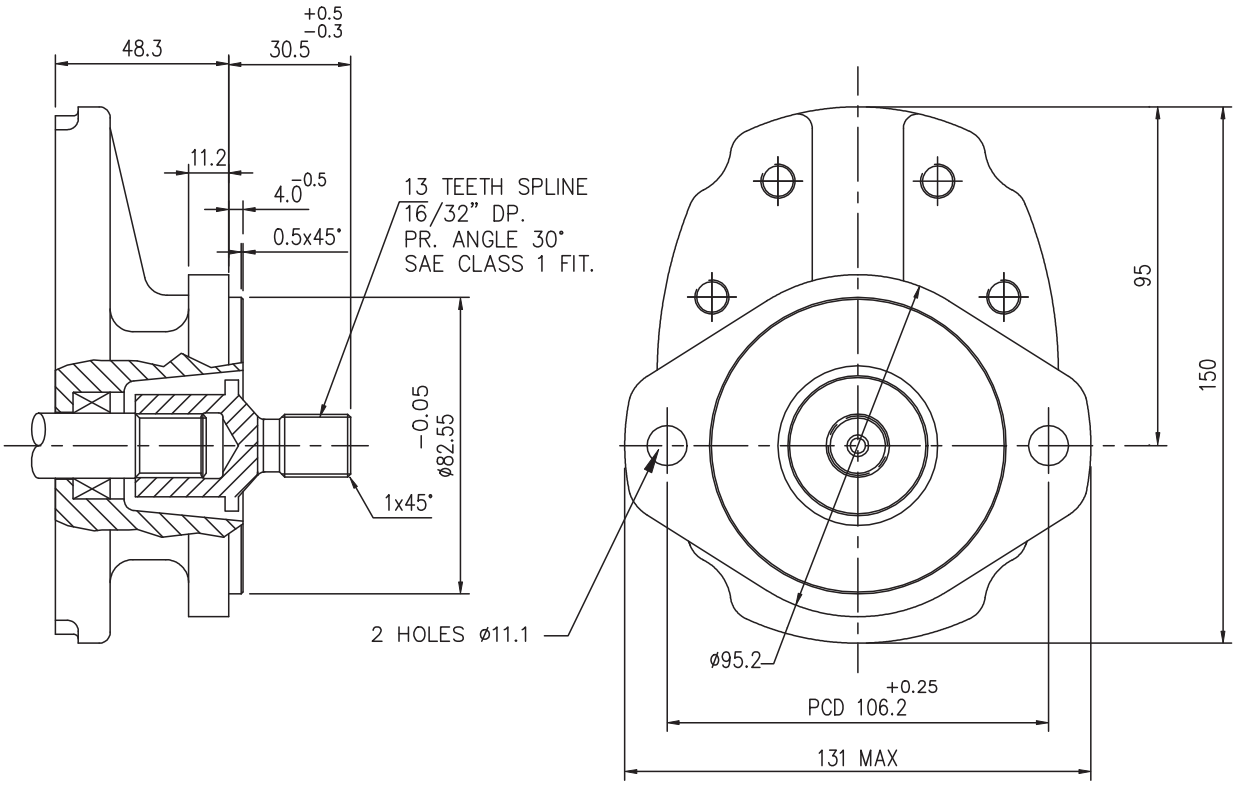

DRIVE SHAFT CODE - Q, (QUILL ADAPTER)

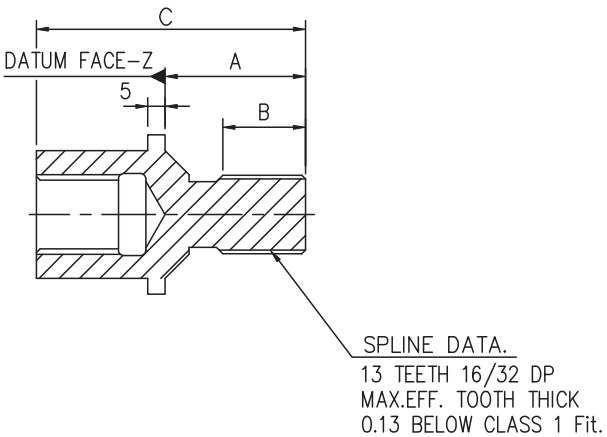

QUILL CODE	MAX. STANDOUT	SPLINE LENGTH	TOTAL LENGTH
	A	B	C
K2	26.7	12.2	52
K3	41.5	25.4	67

ALL DIMENSIONS ARE IN mm UNLESS OTHERWISE SPECIFIED

MOUNTING FLANGE CODE - X

2 - BOLT MOUNTING

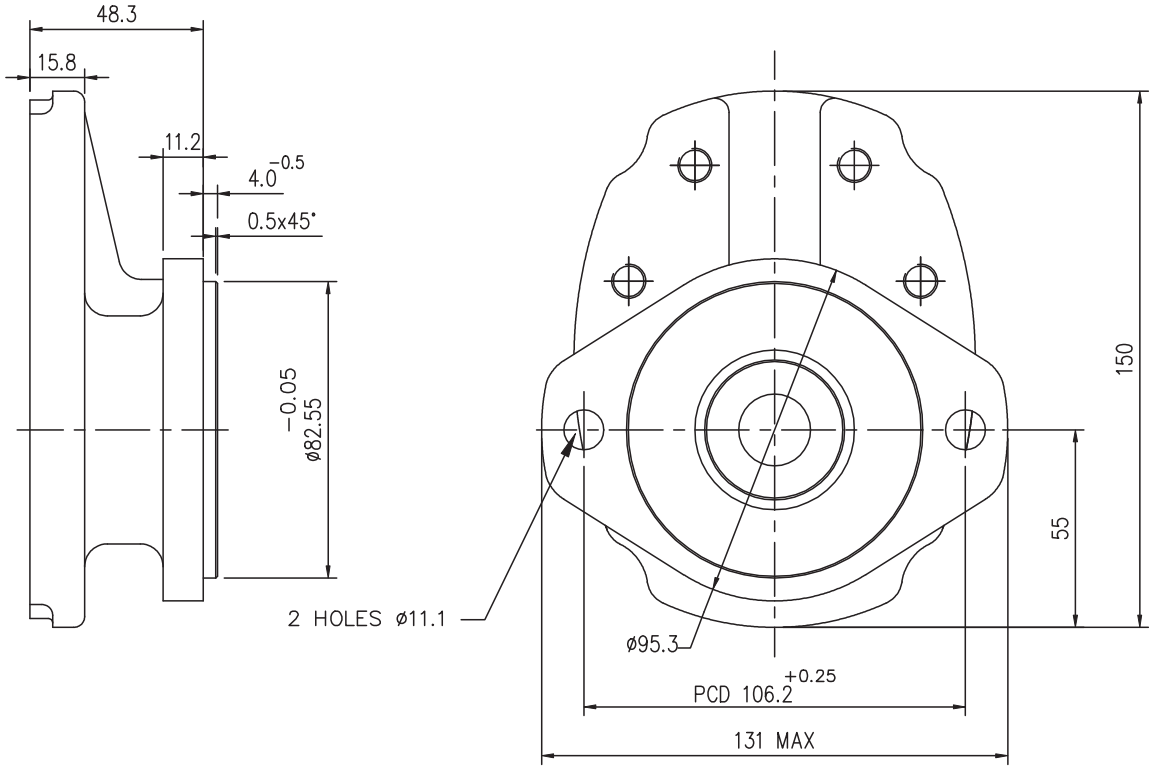

MOUNTING FLANGE CODE - H

6 - BOLT MOUNTING

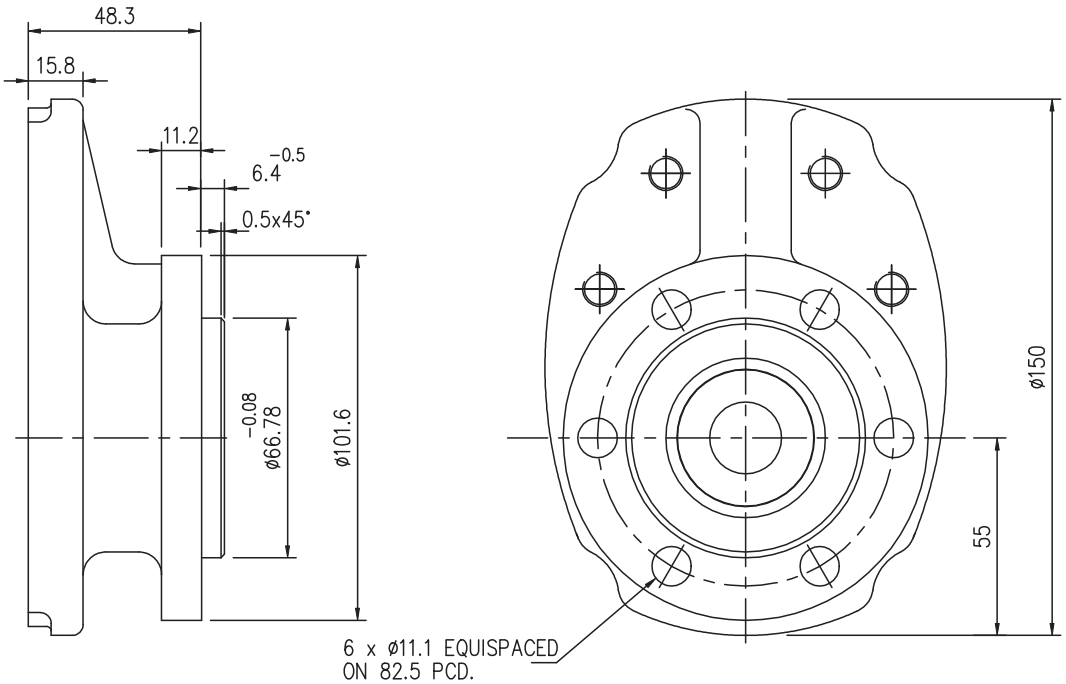

ALL DIMENSIONS ARE IN mm UNLESS OTHERWISE SPECIFIED

MOUNTING FLANGE CODE - D

4 - BOLT MOUNTING

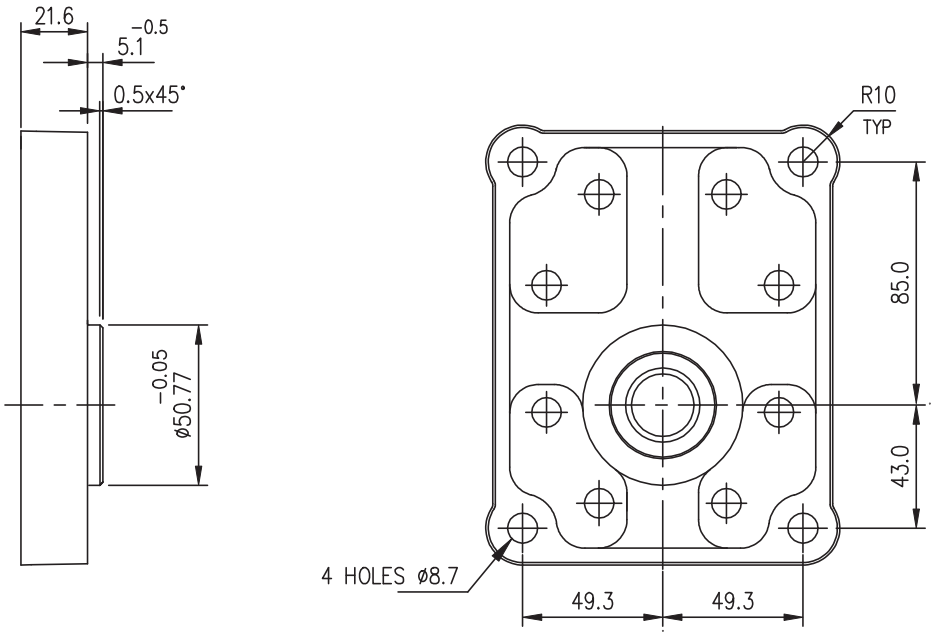

MOUNTING FLANGE CODE - S

SAE-B, 2-BOLT MOUNTING

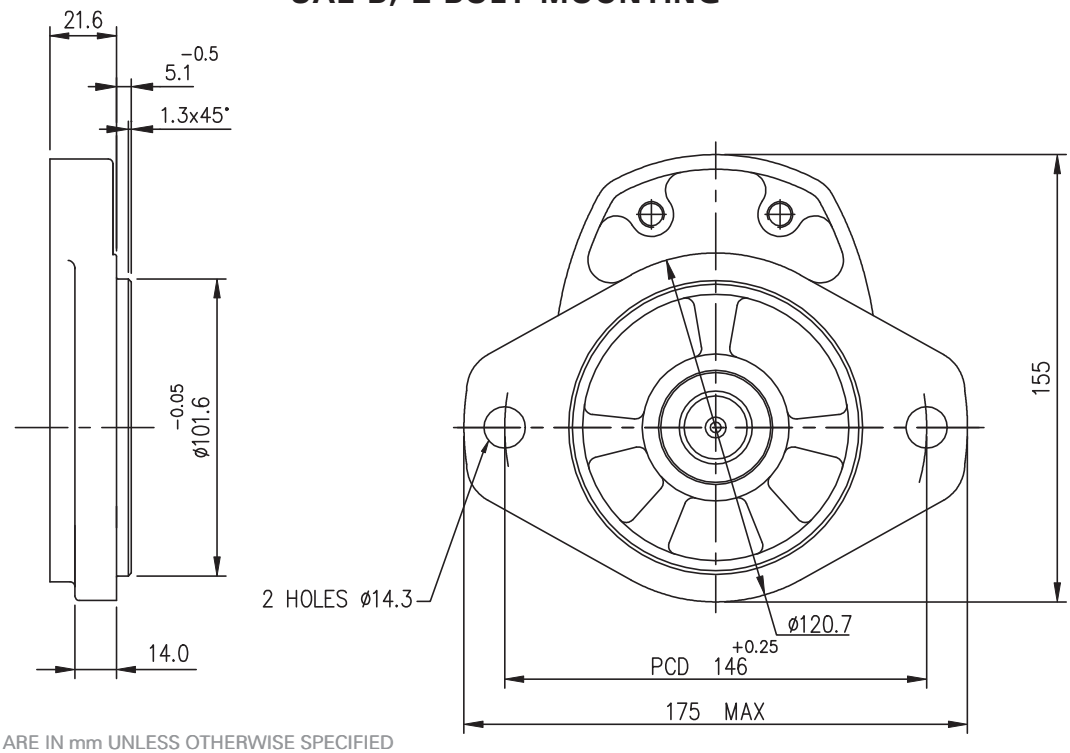

ALL DIMENSIONS ARE IN mm UNLESS OTHERWISE SPECIFIED

FLANGE CODE - X

DRIVE SHAFT CODE -Q, QUILL ADAPTER ASSEMBLY (K2)

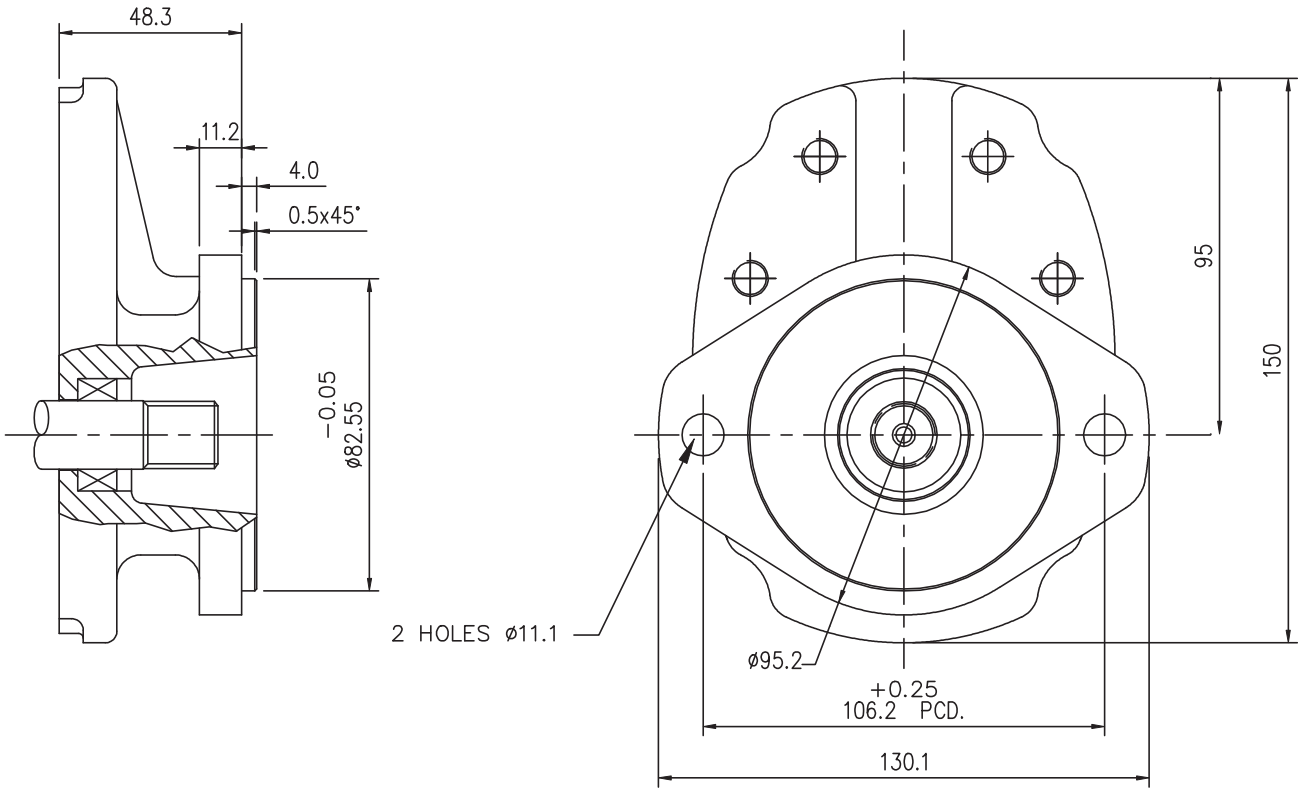

ALL DIMENSIONS ARE IN mm UNLESS OTHERWISE SPECIFIED

MOUNTING COVER CODE - A

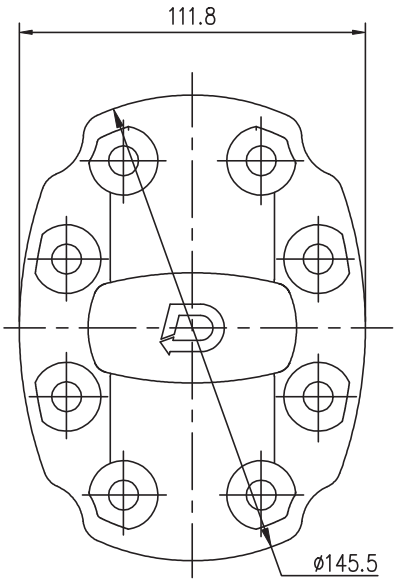

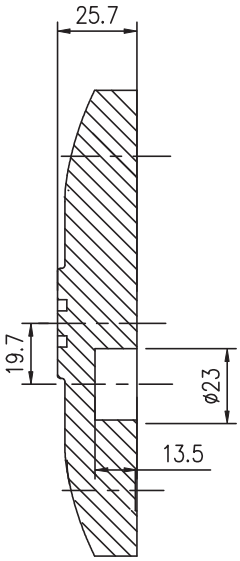

MOUNTING COVER CODE - B

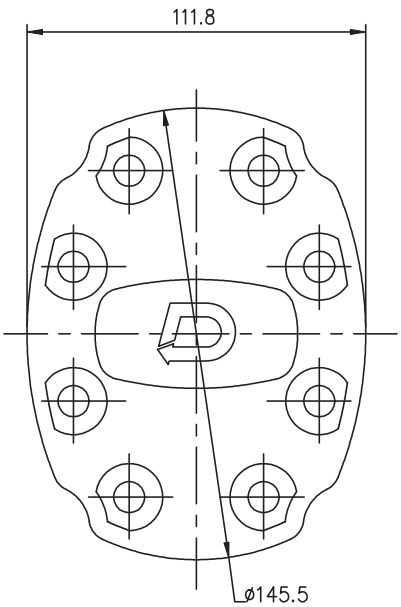

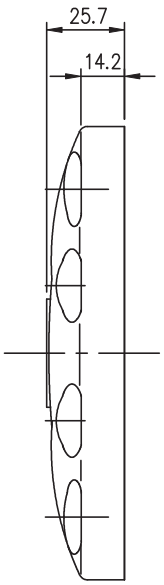

ALL DIMENSIONS ARE IN mm UNLESS OTHERWISE SPECIFIED

PERFORMANCE DATA

Pressures quoted are relief valve maximum by-pass
Performance with SAE 20W oil at 50˚C

PUMP TYPE	DISPLACEMENT	DELIVERY @1500 RPM & PRESSURE P		MAXIMUM CONTINUOUS PRESSURE P		SPEED AT MAXIMUM CONTINUOUS PRESSURE P	
	cc/rev	MIN (lpm)	MAX (lpm)	psi	bar	MAX	MIN
3150	47.07	65.3	70.6	3000	207	2500	700
3180	56.17	78.2	84.2	3000	207	2500	700
3210	65.23	91.7	97.8	3000	207	2500	700
3250	77.15	109.0	115.7	3000	207	2500	700
3300	92.03	130.6	138.0	2525	174	2500	700
3330	101.71	144	152.6	2300	159	2500	700
3380	116.78	166.1	175.2	2000	138	2500	700
3500	153.66	217.9	230.5	1500	100	2500	700

TYPICAL PERFORMANCE

TYPICAL PUMP DELIVERY
Flow at Max. Pressure

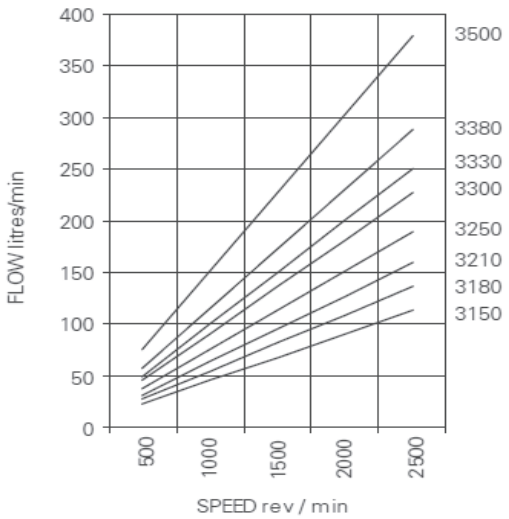

TYPICAL INPUT HORSEPOWER
Fluid SAE 20W
Fluid Temperature 50˚C

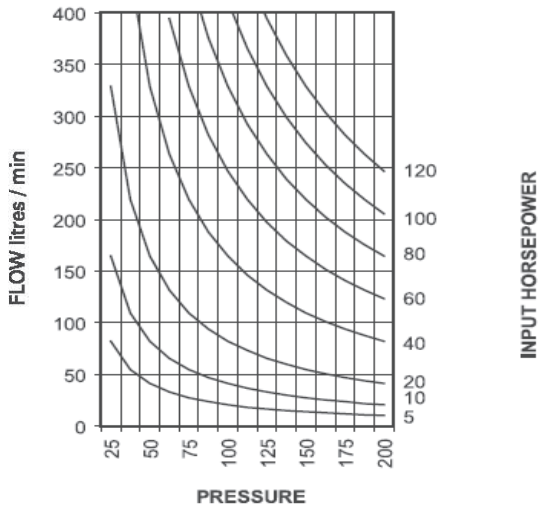

INSTALLATION DIMENSIONS

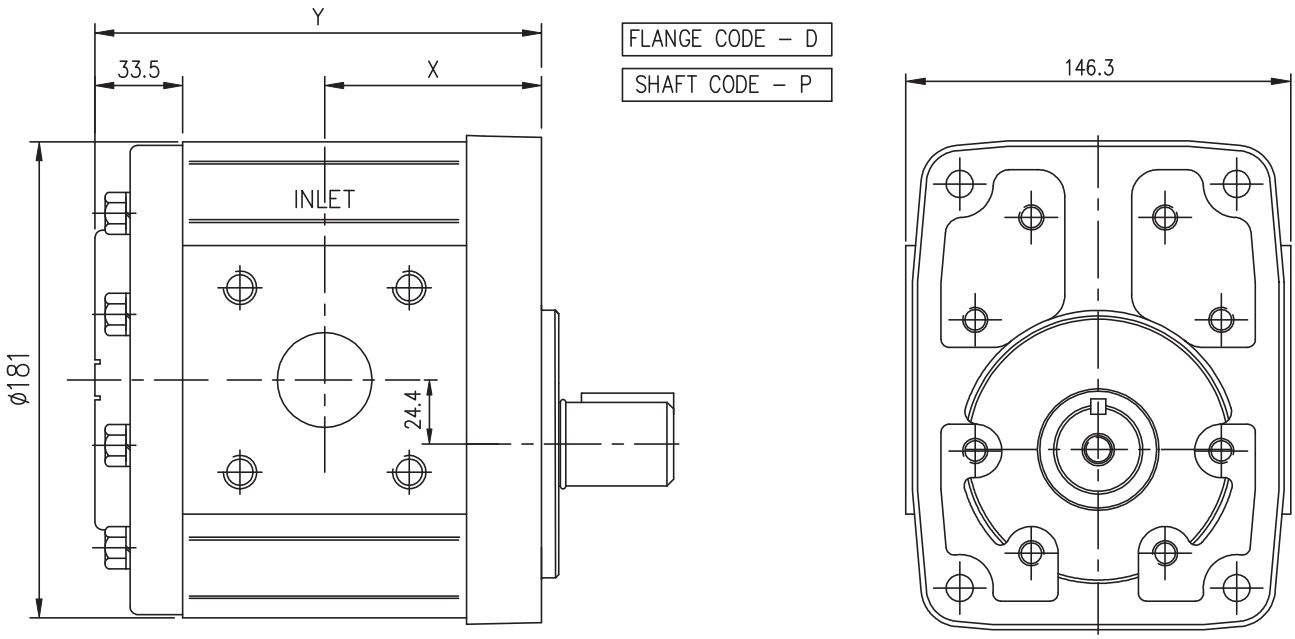

PUMP TYPE	DIMENSIONS	
	X	Y
3P 3150	70.0	145.1
3P 3180	72.4	150.1
3P 3210	74.9	154.8
3P 3250	78.0	161.2
3P 3300	82.0	169.1
3P 3330	84.6	174.2
3P 3380	88.6	182.3
3P 3500	98.9	202.8

NOTE:

- The representation for the pump assembly drawing is for anti-clockwise direction of shaft rotation as viewed from pump drive shaft end. For clockwise rotation of pump shaft, the position of inlet & outlet ports will interchange.
- Unless otherwise specified, the dimension 'X' is identical for both inlet & outlet port positions

ALL DIMENSIONS ARE IN mm UNLESS OTHERWISE SPECIFIED

DRIVE SHAFT CODE - S

FLANGE CODE: D & S

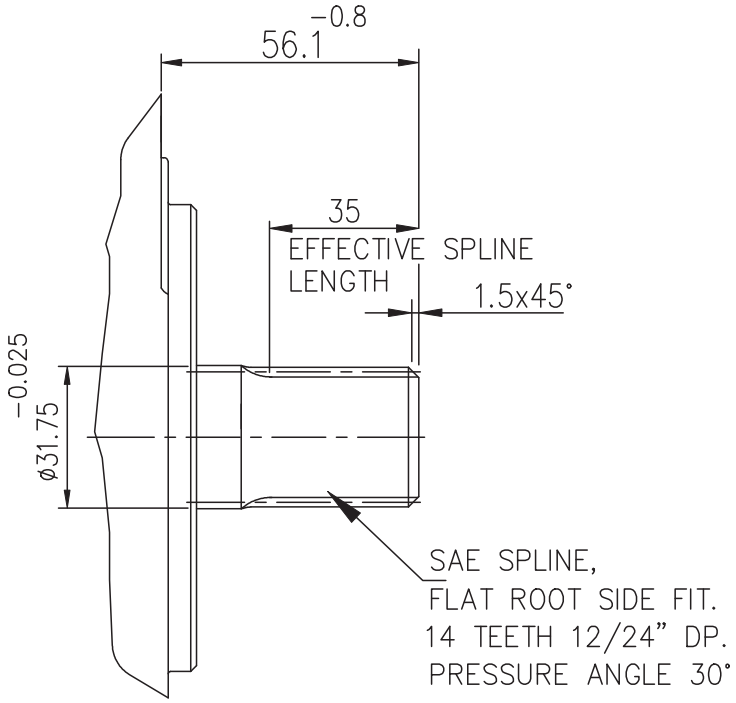

DRIVE SHAFT CODE - J

FLANGE CODE: D & S

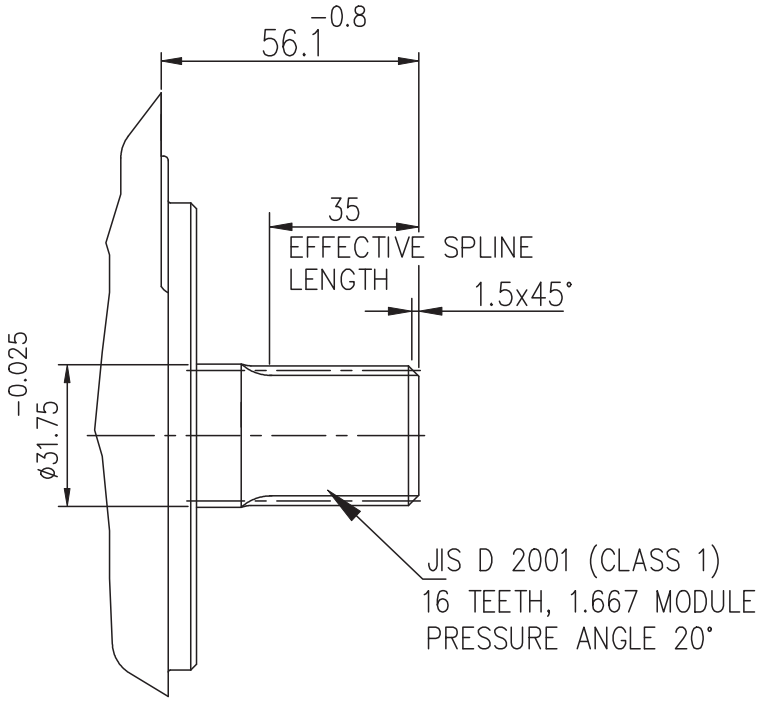

ALL DIMENSIONS ARE IN mm UNLESS OTHERWISE SPECIFIED

DRIVE SHAFT CODE - P

FLANGE CODE: D & S

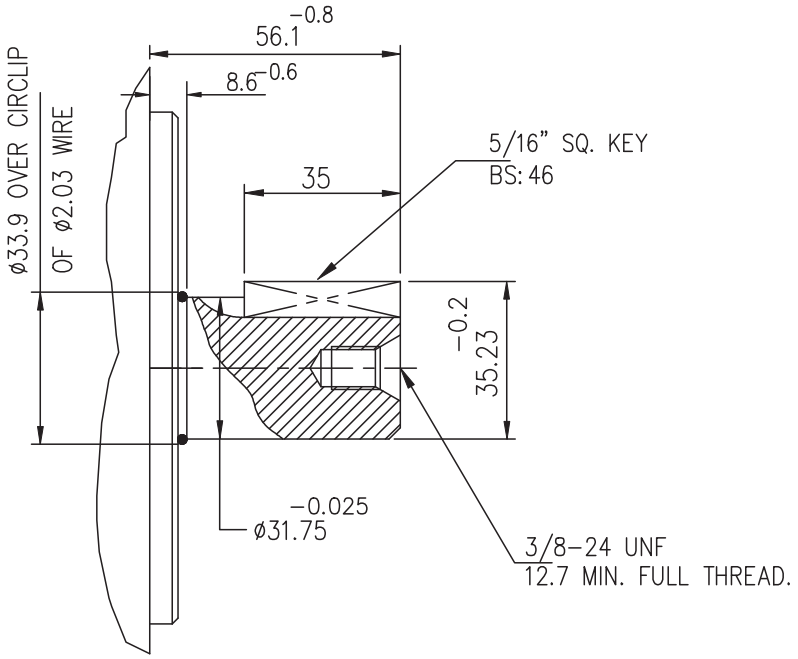

DRIVE SHAFT CODE - T

FLANGE CODE: D & S

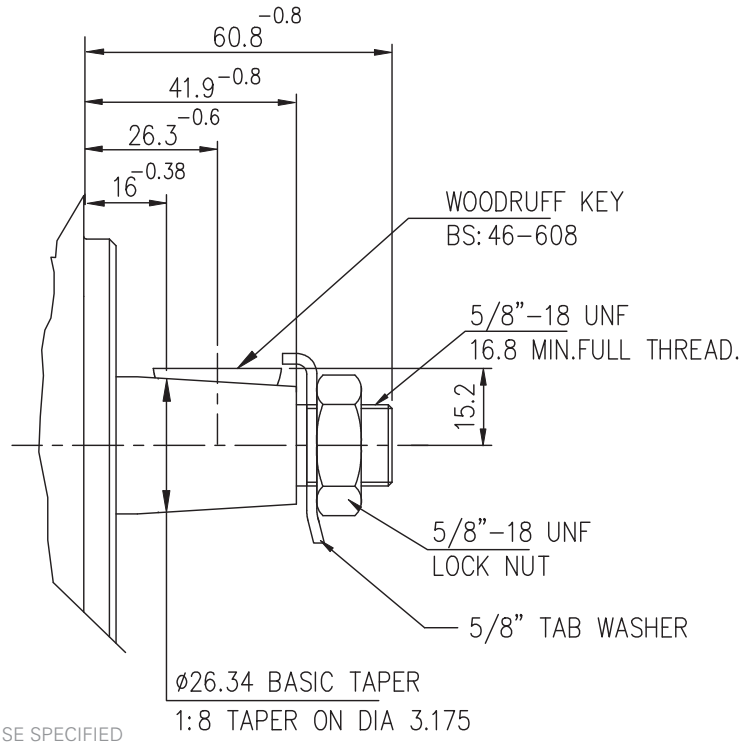

ALL DIMENSIONS ARE IN mm UNLESS OTHERWISE SPECIFIED

DRIVE SHAFT CODE - B

FLANGE CODE: B, C & E

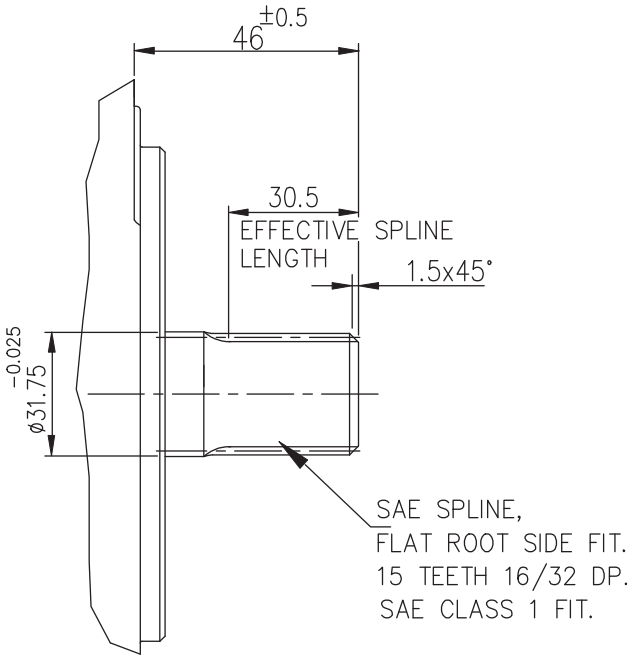

DRIVE SHAFT CODE - C

FLANGE CODE: D & S

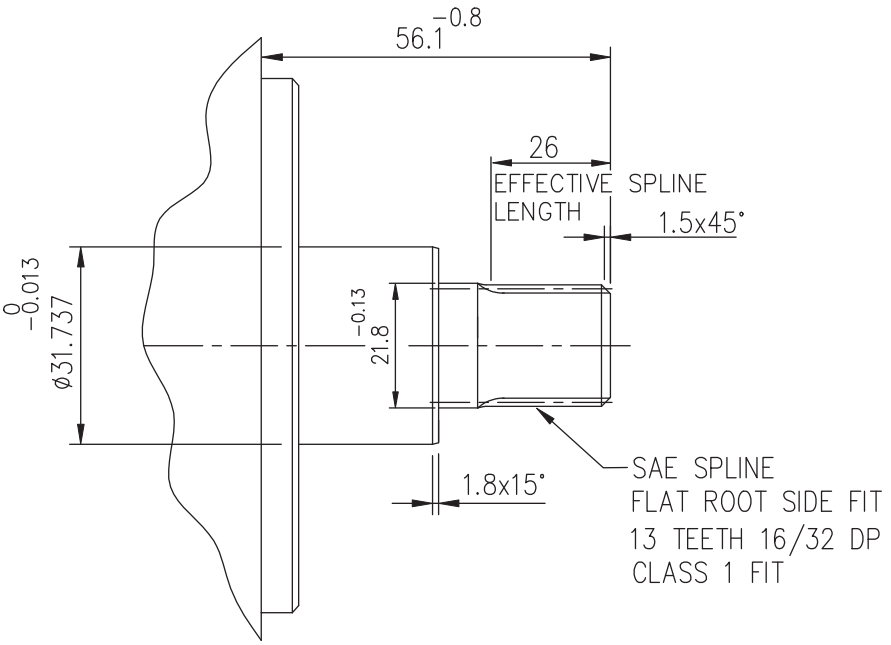

ALL DIMENSIONS ARE IN mm UNLESS OTHERWISE SPECIFIED

BODY PORTS CODE - F

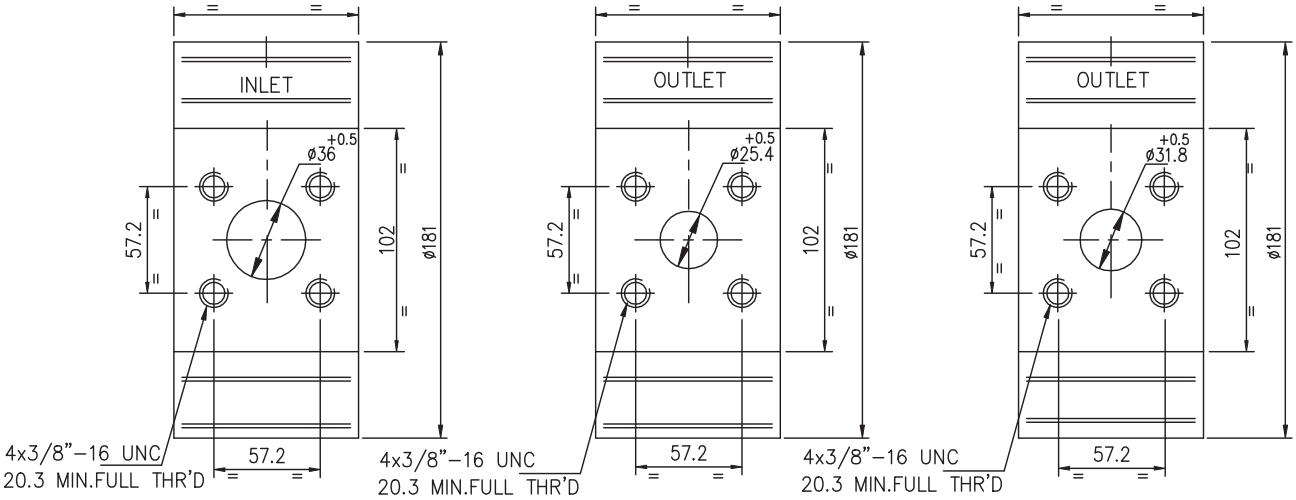

INLET PORT

PUMP TYPE
3P 3150
3P 3180
3P 3210
3P 3250
3P 3300
3P 3330
3P 3380

OUTLET PORT

PUMP TYPE
3P 3150
3P 3180
3P 3210
3P 3250
3P 3300

OUTLET PORT

PUMP TYPE
3P 3330
3P 3380

BODY PORTS CODE - S

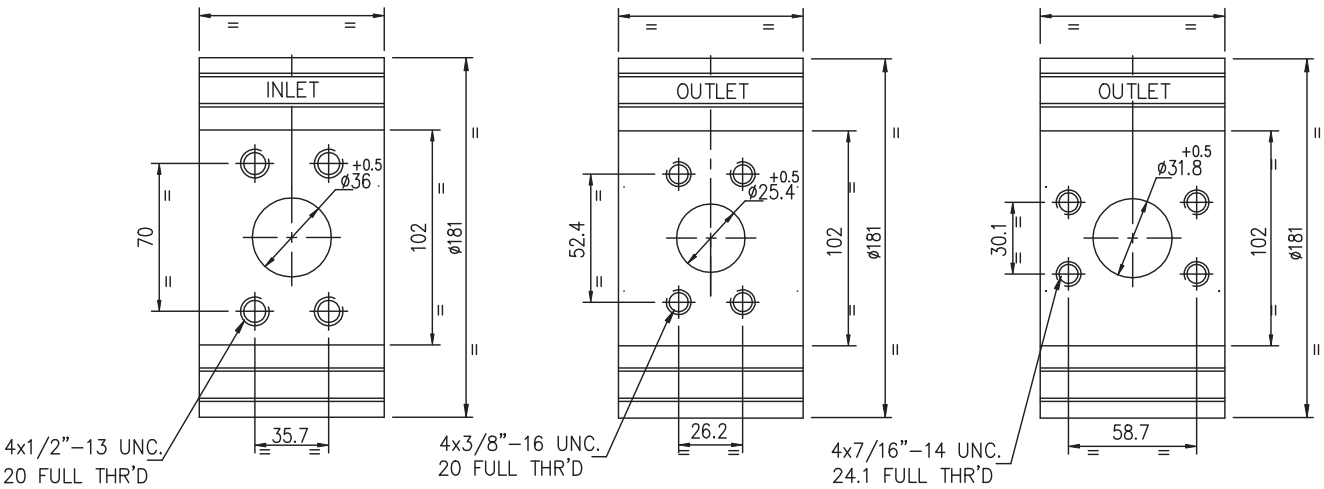

INLET PORT

PUMP TYPE
3P 3150
3P 3180
3P 3210
3P 3250
3P 3300
3P 3330
3P 3380

OUTLET PORT

PUMP TYPE
3P 3150
3P 3180
3P 3210
3P 3250
3P 3300

OUTLET PORT

PUMP TYPE
3P 3330
3P 3380

ALL DIMENSIONS ARE IN mm UNLESS OTHERWISE SPECIFIED

BODY PORTS CODE - S

PUMP TYPE - 3P 3500

WITH SUCTION ADAPTOR

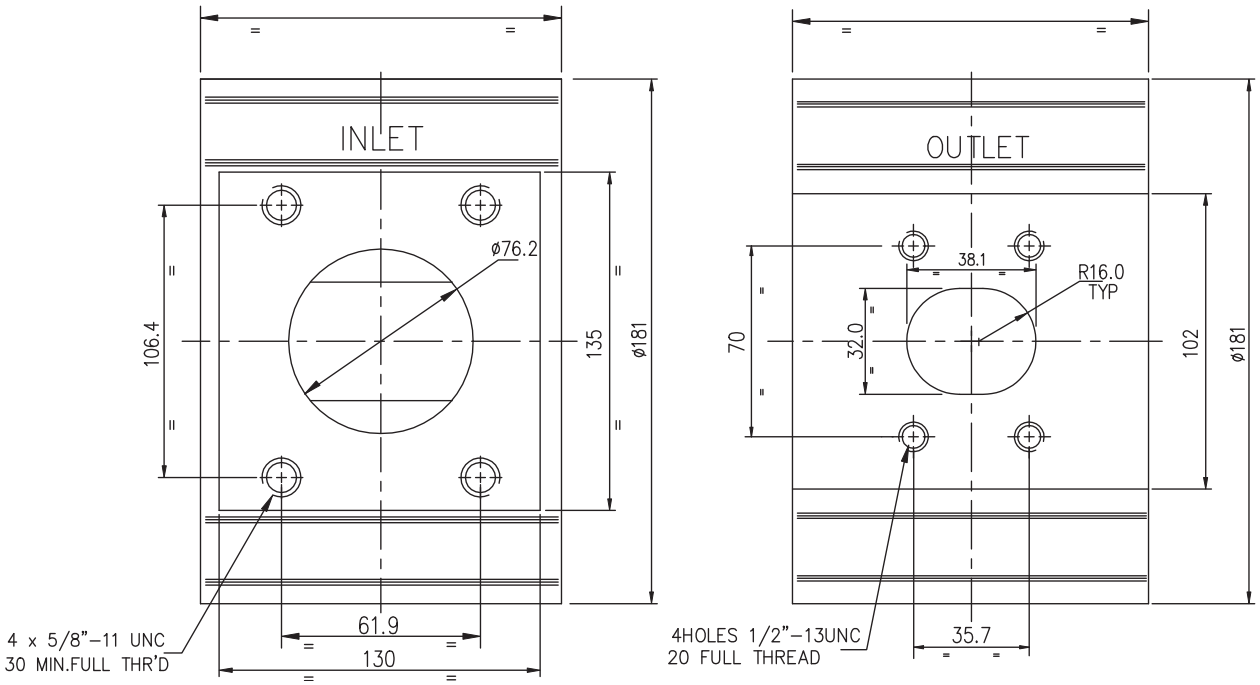

WITH OUT SUCTION ADAPTOR

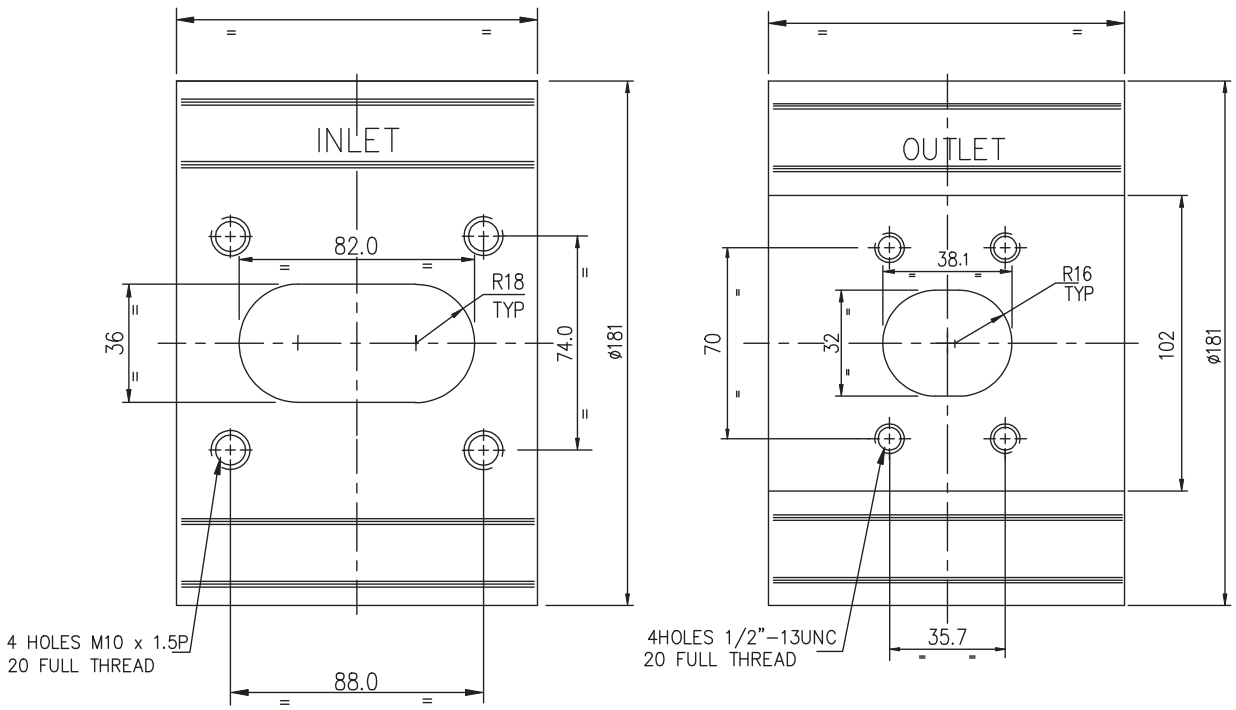

ALL DIMENSIONS ARE IN mm UNLESS OTHERWISE SPECIFIED

MOUNTING FLANGE 4 - BOLT SAE CODE- 3

(With Bearing Support)

Available with shaft code P and S only

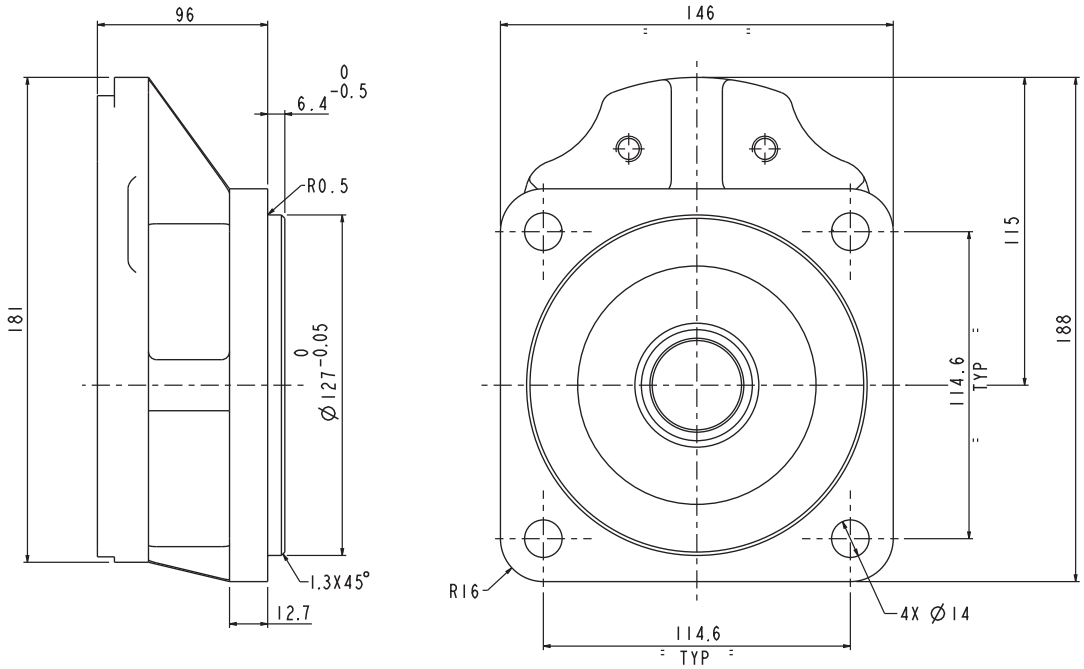

MOUNTING FLANGE 4-BOL T SAE CODE-2

(With Bearing Support)

Available with shaft code P and S

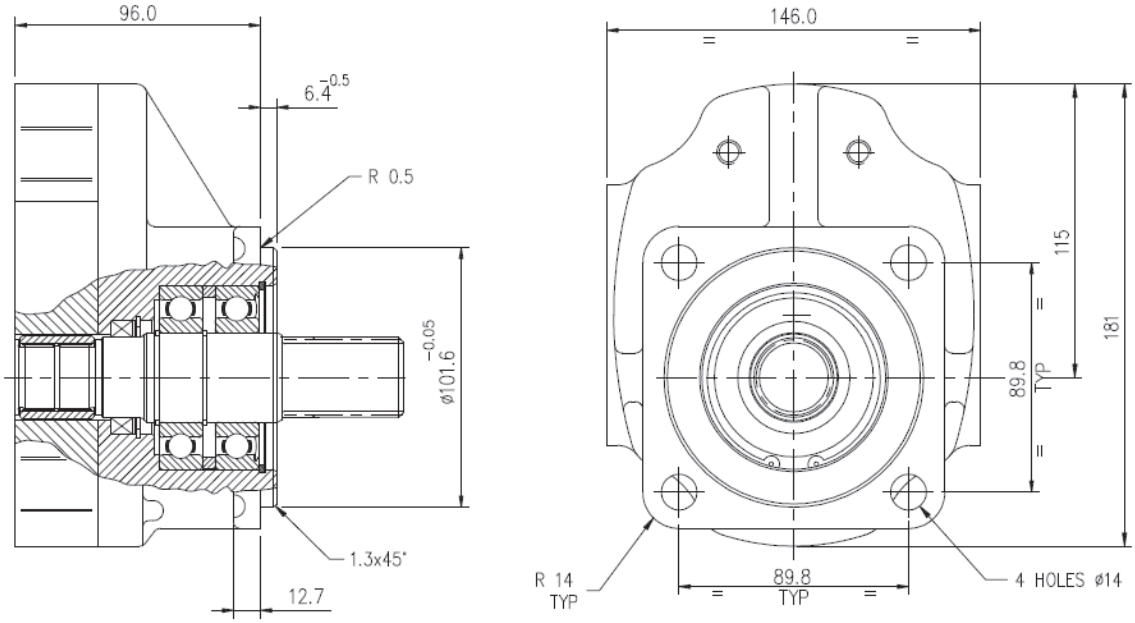

ALL DIMENSIONS ARE IN mm UNLESS OTHERWISE SPECIFIED

MOUNTING FLANGE 4-BOLT SAE CODE-B

Available with shaft code P and S

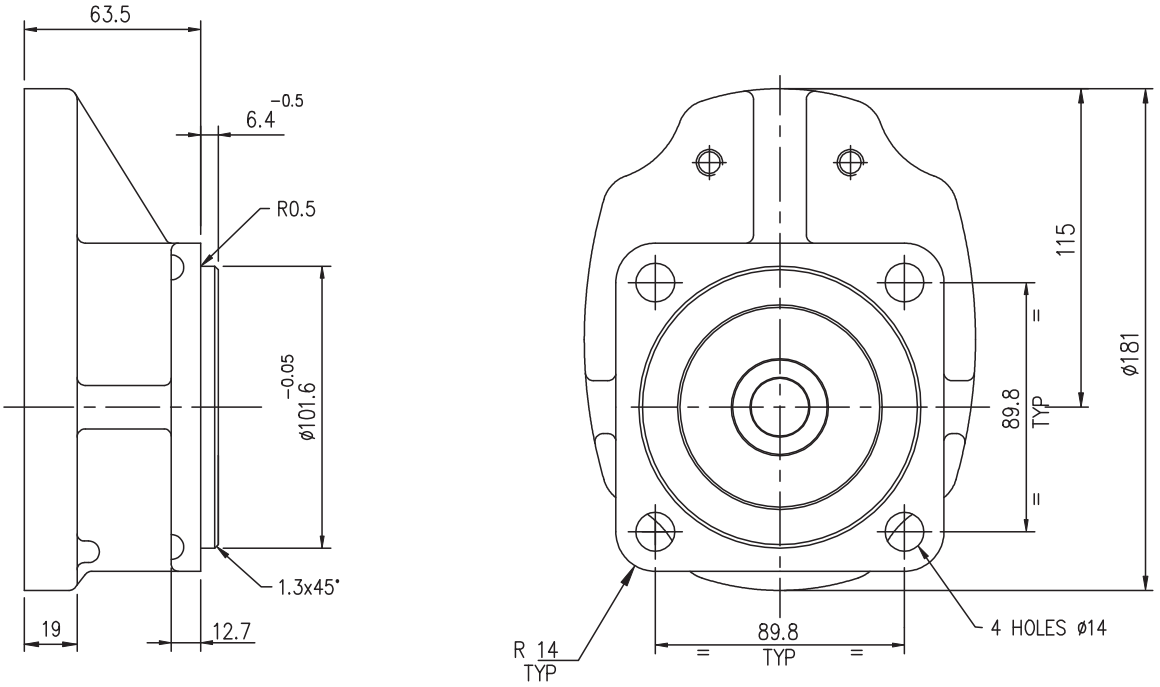

MOUNTING FLANGE 4-BOLT SAE CODE-C

Available with shaft code P and S

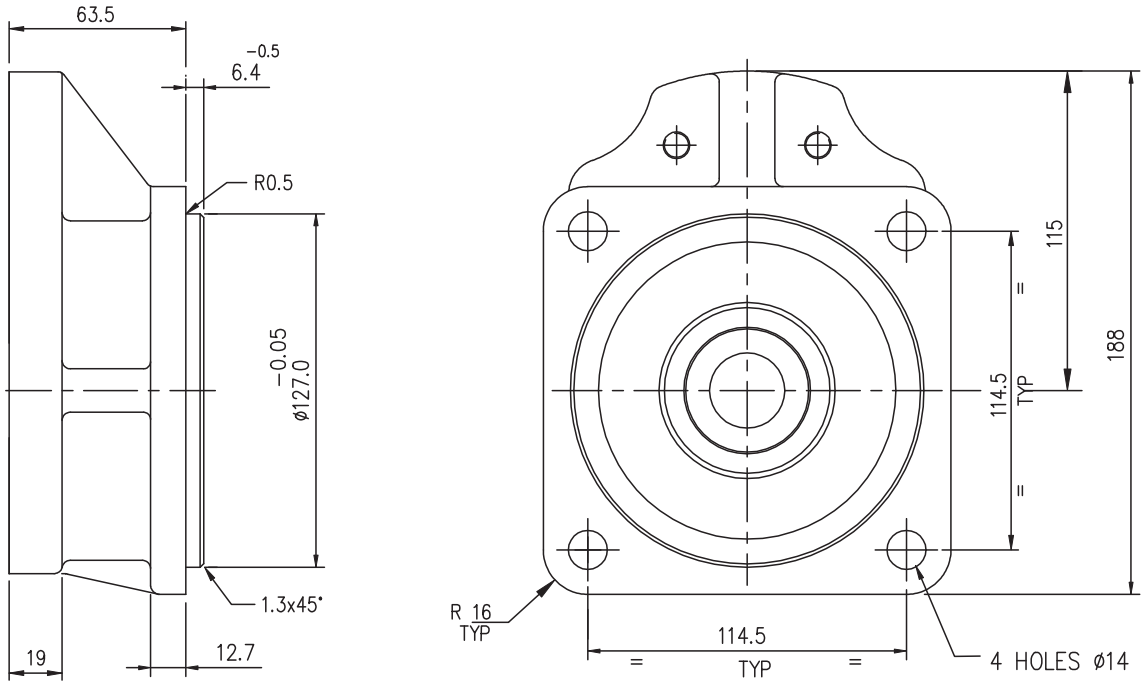

ALL DIMENSIONS ARE IN mm UNLESS OTHERWISE SPECIFIED

MOUNTING FLANGE CODE - D

4 - BOLT MOUNTING

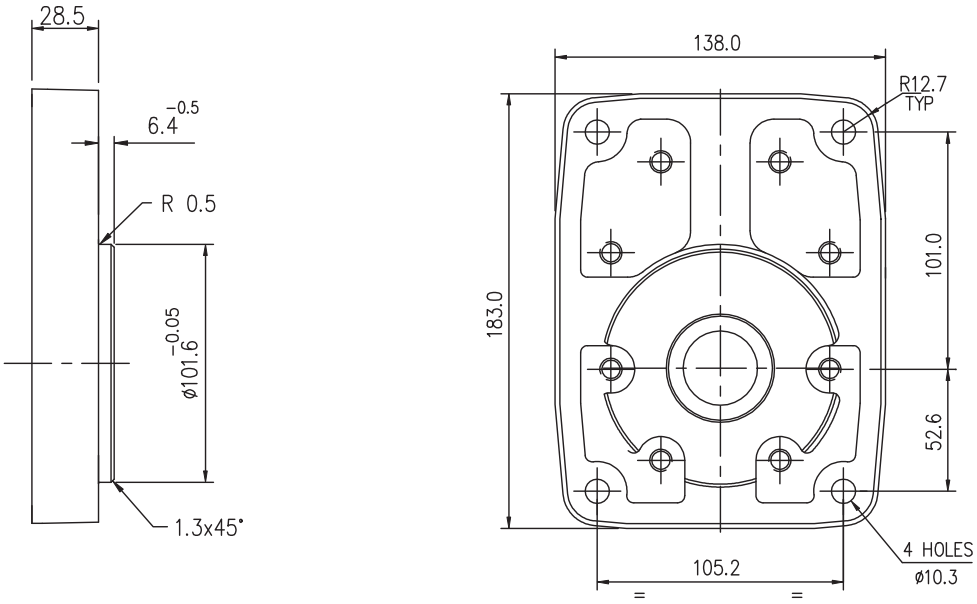

MOUNTING FLANGE CODE - S

SAE -C, 2-BOLT MOUNTING

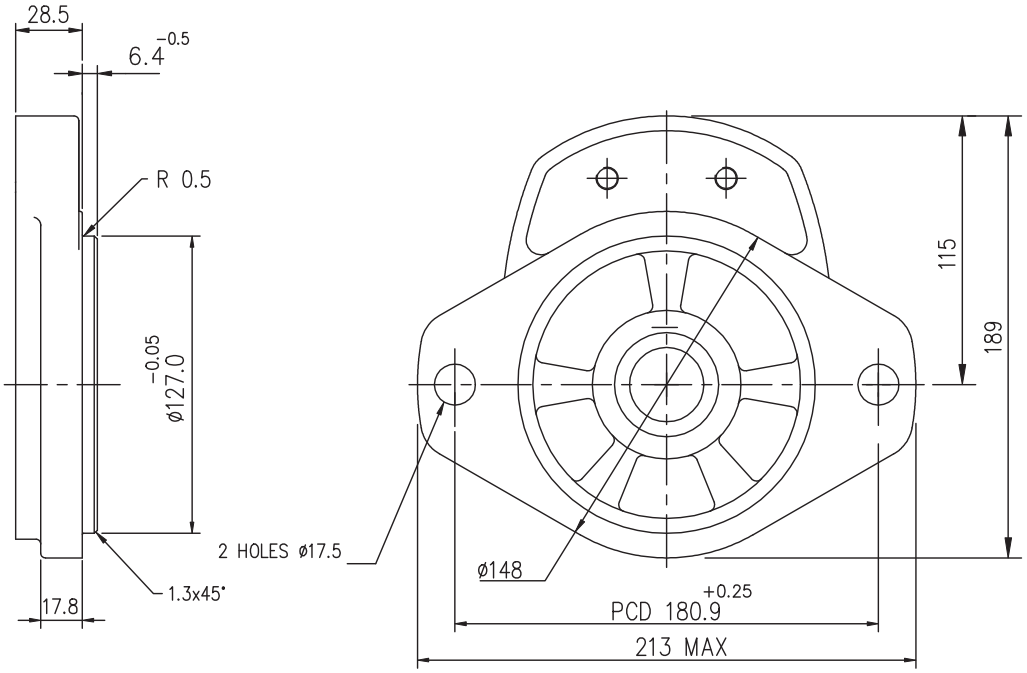

ALL DIMENSIONS ARE IN mm UNLESS OTHERWISE SPECIFIED

MOUNTING FLANGE CODE - E

SAE-A, 2-BOLT MOUNTING

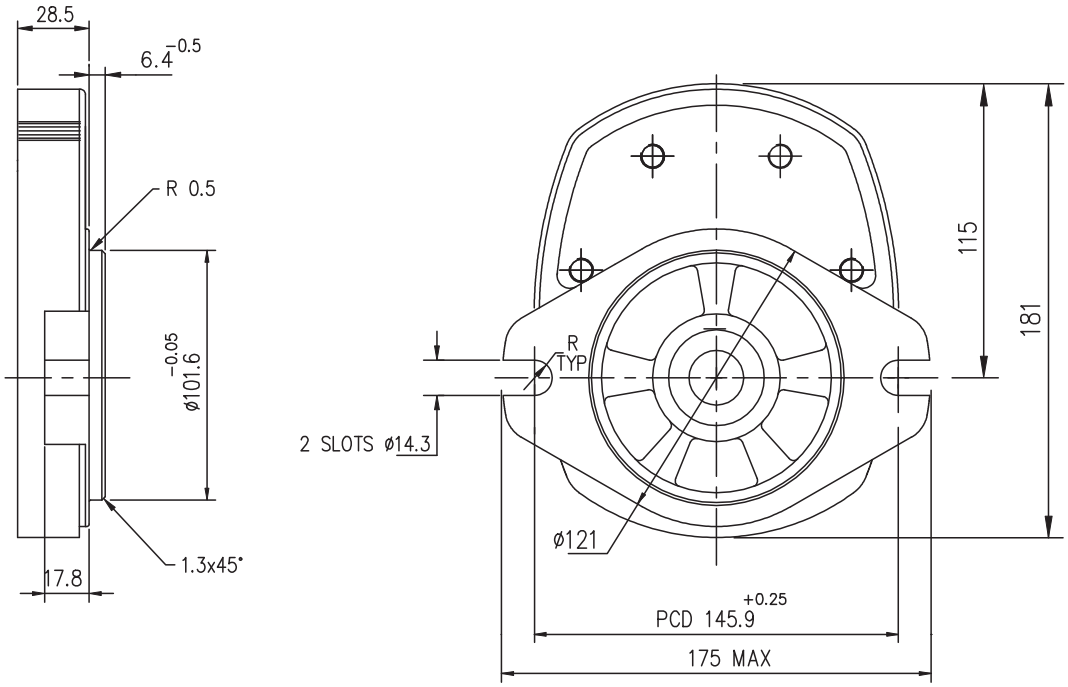

ALL DIMENSIONS ARE IN mm UNLESS OTHERWISE SPECIFIED

MOUNTING COVER CODE - A

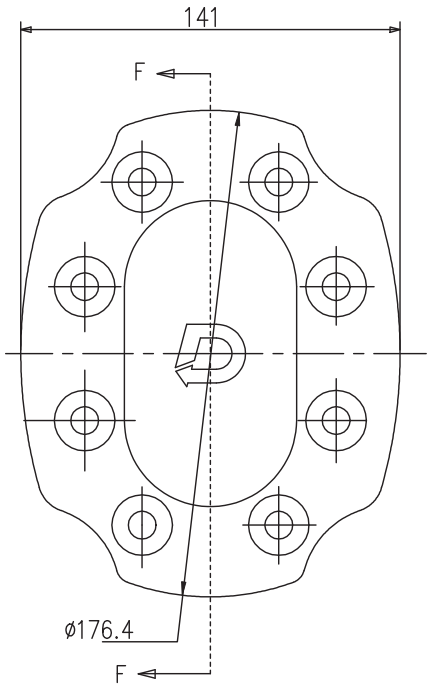

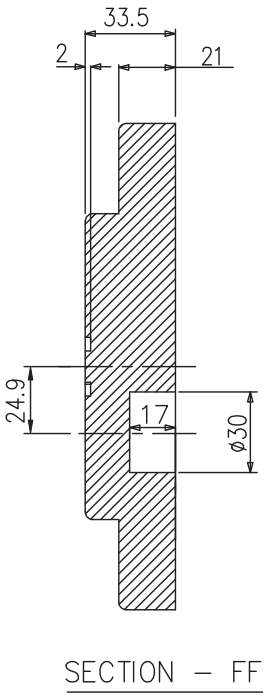

MOUNTING COVER CODE - B

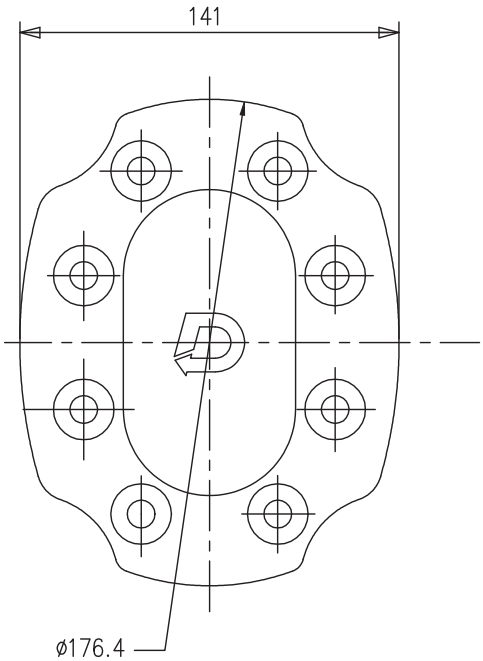

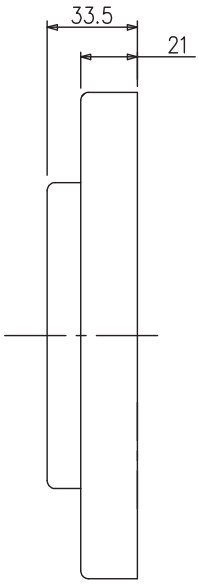

ALL DIMENSIONS ARE IN mm UNLESS OTHERWISE SPECIFIED

DOUBLE
TANDEM PUMP

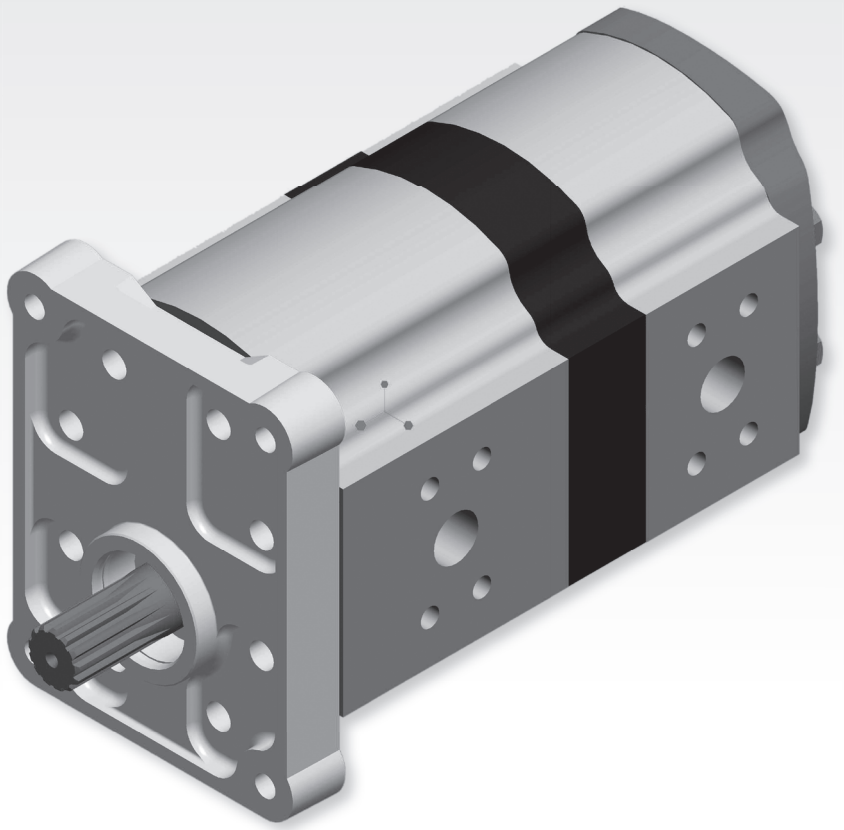

INSTALLATION DIMENSIONS

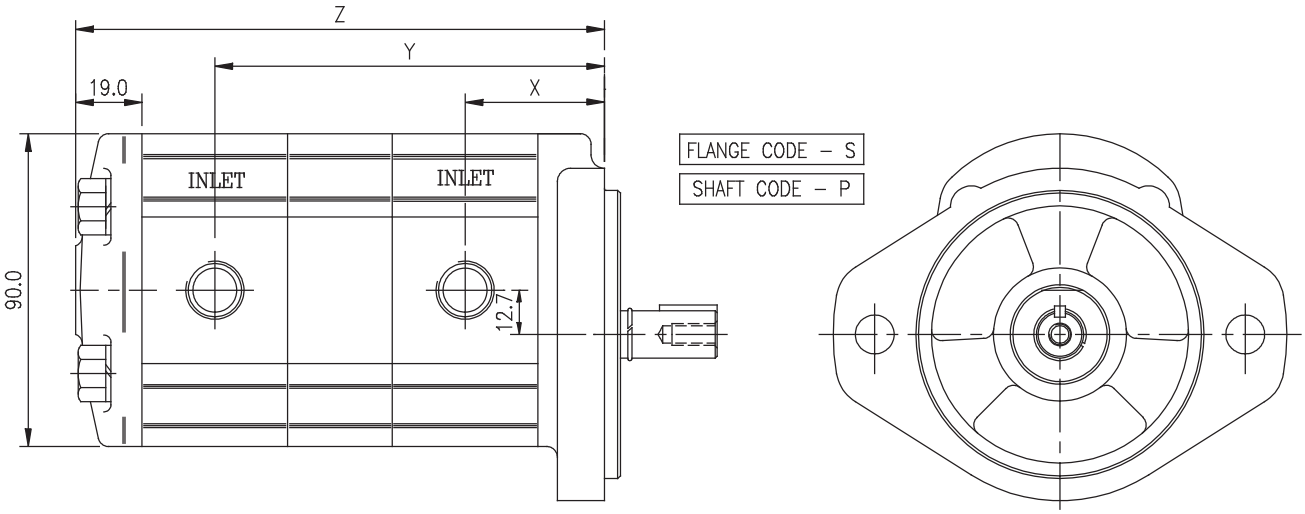

PUMP TYPE 0P - 0P	DIMENSIONS		
	X	Y	Z
3013-3013	41.6	112.0	153.5
-3011	"	111.3	152.2
-3008	"	110.3	150.2
-3006	"	109.6	148.7
-3004	"	109.0	147.6
-3003	"	108.6	146.7
3011-3011	40.9	110.0	150.8
-3008	"	109.0	148.8
-3006	"	108.2	147.4
-3004	"	107.7	146.2
-3003	"	107.2	145.4
3008-3008	39.9	107.0	146.8
-3006	"	106.2	145.4
-3004	"	105.7	144.3
-3003	"	105.3	143.4
3006-3006	39.1	104.8	143.9
-3004	"	104.2	142.8
-3003	"	103.8	141.9
3004-3004	38.6	103.1	141.6
-3003	"	102.7	140.8
3003-3003	38.1	101.8	139.9

PUMP TYPE 0P - 0P	DIMENSIONS		
	X	Y	Z
3025-3025	45.4	123.4	168.8
-3019	"	121.5	164.9
-3015	"	120.4	162.6
-3013	"	119.6	161.2
-3011	"	118.9	159.8
-3008	"	118.0	157.8
-3006	"	117.2	156.3
-3004	"	116.7	155.2
-3003	"	116.2	154.4
3019-3019	43.4	117.7	161.1
-3015	"	116.5	158.8
-3013	"	115.8	157.3
-3011	"	115.1	156.0
-3008	"	114.1	154.0
-3006	"	113.4	152.5
-3004	"	112.8	151.4
-3003	"	112.4	150.5
3015-3015	42.3	114.0	156.4
-3013	"	113.4	155.0
-3011	"	112.7	153.6
-3008	"	111.8	151.6
-3006	"	111.0	150.1
-3004	"	110.5	149.0
-3003	"	110.0	148.2

NOTE:

- The representation for the pump assembly drawing is for anti-clockwise direction of shaft rotation as viewed from pump drive shaft end. For clockwise rotation of pump shaft, the position of inlet & outlet ports will interchange.
- Unless otherwise specified, the dimension 'X' & 'Y' are identical for both inlet & outlet port positions

ALL DIMENSIONS ARE IN mm UNLESS OTHERWISE SPECIFIED

INSTALLATION DIMENSIONS

1P 3000 SERIES

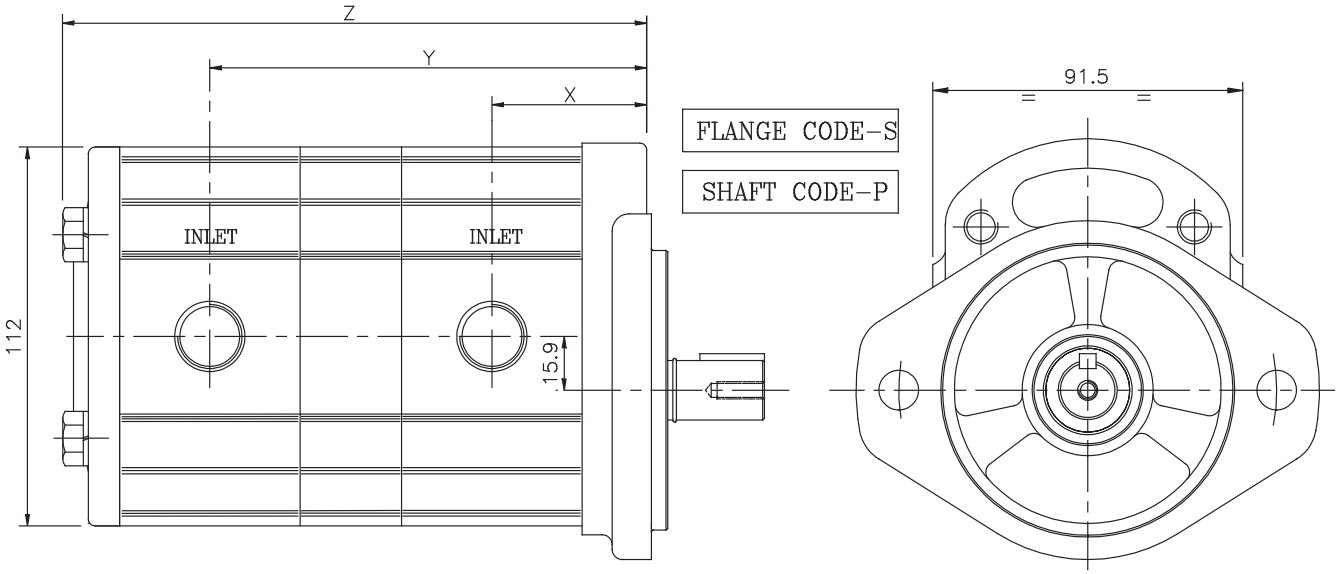

PUMP TYPE 1P - 1P	DIMENSIONS		
	X	Y	Z
3090-3090	63.3	182.1	244.2
-3072	"	178.7	237.5
-3060	"	176.4	232.9
-3052	"	174.9	229.2
-3044	"	173.4	226.8
-3036	"	164.3	206.7
-3028	"	162.8	205.7
-3020	"	161.3	202.6
-3017	"	160.5	201.0
3072-3072	60.0	172.1	230.9
-3060	"	169.8	226.3
-3052	"	168.2	223.2
-3044	"	166.7	220.1
-3036	"	157.7	202.1
-3028	"	156.1	199.1
-3020	"	154.6	196.9
-3017	"	153.8	194.4
3060-3060	57.7	165.1	221.7
-3052	"	163.6	218.6
-3044	"	162.1	215.5
-3036	"	153.0	197.5
-3028	"	151.5	194.4
-3020	"	150.0	191.3
-3017	"	149.2	189.8

PUMP TYPE 1P - 1P	DIMENSIONS		
	X	Y	Z
3052-3052	56.2	160.5	215.5
-3044	"	159.0	212.5
-3036	"	150.0	194.4
-3028	"	148.4	191.3
-3020	"	146.9	188.3
-3017	"	146.1	186.7
3044-3044	54.6	155.9	209.4
-3036	"	146.9	191.3
-3028	"	145.4	188.3
-3020	"	143.8	186.2
-3017	"	143.0	183.6
3036-3036	45.6	128.9	173.3
-3028	"	127.3	170.2
-3020	"	125.8	167.1
-3017	"	125.0	165.6
3028-3028	44.1	124.2	167.1
-3020	"	122.7	164.1
-3017	"	121.9	162.5
3020-3020	42.5	119.6	161.0
-3017	"	118.8	159.4
3017-3017	41.8	117.3	157.9

NOTE:

- The representation for the pump assembly drawing is for anti-clockwise direction of shaft rotation as viewed from pump drive shaft end. For clockwise rotation of pump shaft, the position of inlet & outlet ports will interchange.
- Unless otherwise specified, the dimension 'X' & 'Y' are identical for both inlet & outlet port positions

ALL DIMENSIONS ARE IN mm UNLESS OTHERWISE SPECIFIED

INSTALLATION DIMENSIONS

1P 4000 SERIES

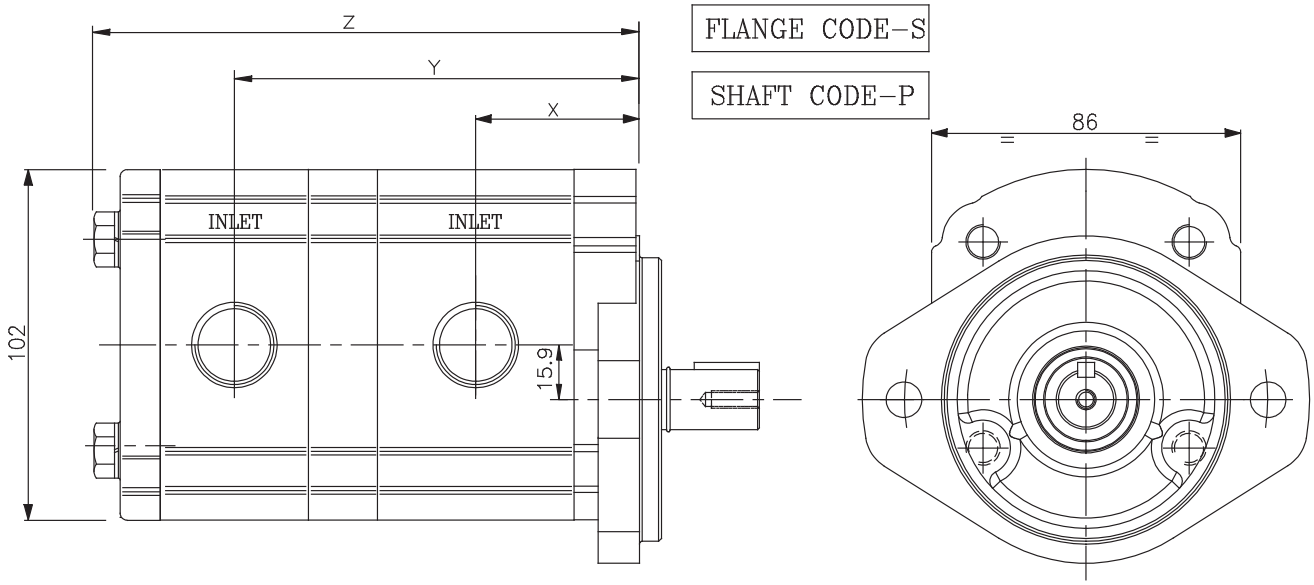

PUMP TYPE 1P - 1P	DIMENSIONS		
	X	Y	Z
4090-4090	63.3	182.1	248.9
-4072	"	178.7	242.2
-4060	"	176.4	237.6
-4052	"	1749	234.5
-4044	"	173.4	231.5
-4036	"	164.3	213.4
-4028	"	162.8	210.3
-4020	"	161.3	207.2
-4017	"	160.5	205.7
4072-4072	60.0	172.1	235.5
-4060	"	169.8	230.9
-4052	"	168.2	227.9
-4044	"	166.7	224.8
-4036	"	157.7	206.7
-4028	"	156.1	203.7
-4020	"	154.6	200.6
-4017	"	153.8	199.0
4060-4060	57.7	165.1	226.3
-4052	"	163.6	222.3
-4044	"	162.1	220.2
-4036	"	153.0	202.1
-4028	"	151.5	199.1
-4020	"	150.0	196.0
-4017	"	149.2	194.4

PUMP TYPE 1P - 1P	DIMENSIONS		
	X	Y	Z
4052-4052	56.2	160.5	220.2
-4044	"	159.0	217.1
-4036	"	150.0	199.1
-4028	"	148.4	196.0
-4020	"	146.9	192.9
-4017	"	146.1	191.4
4044-4044	54.7	155.9	214.1
-4036	"	146.9	196.0
-4028	"	145.4	192.9
-4020	"	143.8	189.8
-4017	"	143.0	188.3
4036-4036	45.6	128.9	177.9
-4028	"	127.3	174.9
-4020	"	125.8	171.8
-4017	"	125.0	170.2
4028-4028	44.1	124.2	171.8
-4020	"	122.7	168.7
-4017	"	121.9	167.2
4020-4020	42.6	119.6	165.6
-4017	"	118.8	164.1
4017-4017	41.8	117.3	162.5

NOTE:

- The representation for the pump assembly drawing is for anti-clockwise direction of shaft rotation as viewed from pump drive shaft end. For clockwise rotation of pump shaft, the position of inlet & outlet ports will interchange.
- Unless otherwise specified, the dimension 'X' & 'Y' are identical for both inlet & outlet port positions

ALL DIMENSIONS ARE IN mm UNLESS OTHERWISE SPECIFIED

INSTALLATION DIMENSIONS

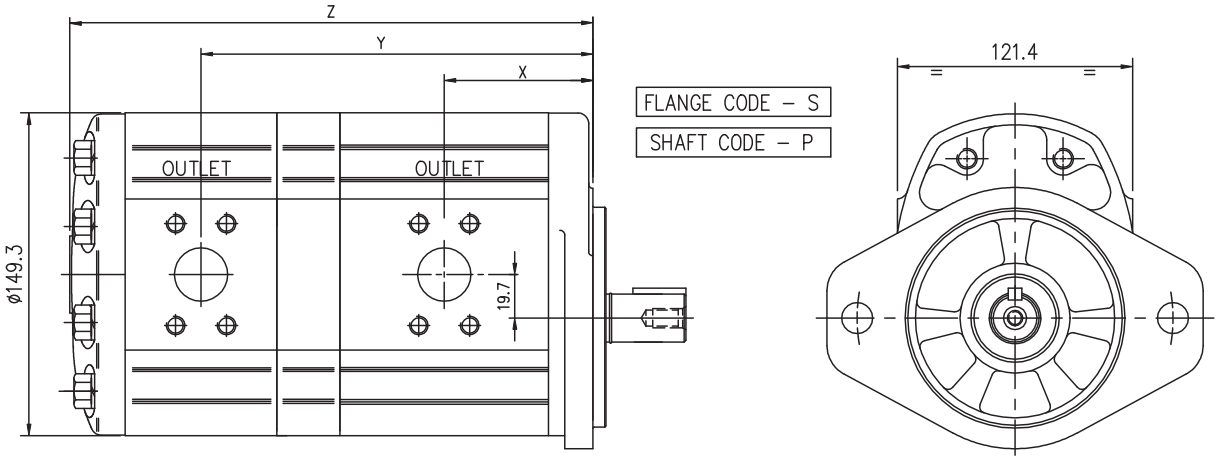

PUMP TYPE 2P - 2P	DIMENSIONS		
	X	Y	Z
3220-3220	81.7	235.0	320.8
-3158	"	227.6	306.0
-3146	"	226.0	302.9
-3120	"	223.0	296.8
-3105	"	221.1	293.1
-3090	"	212.4	275.6
-3070	"	210.0	270.8
-3050	"	207.5	265.9
3158-3158	74.3	212.7	291.1
-3146	"	211.2	288.1
-3120	"	208.1	282.0
-3105	"	206.3	278.3
-3090	"	197.5	260.7
-3070	"	195.1	256.0
-3050	"	192.7	251.1
3146-3146	72.7	208.1	285.0
-3120	"	205.1	278.9
-3105	"	203.2	275.2
-3090	"	194.5	257.7
-3070	"	192.0	252.9
-3050	"	189.6	248.0

PUMP TYPE 2P - 2P	DIMENSIONS		
	X	Y	Z
3120-3120	69.7	199.0	272.8
-3105	"	197.1	269.1
-3090	"	188.3	251.6
-3070	"	185.9	246.7
-3050	"	183.5	241.9
3105-3105	67.9	193.4	265.4
-3090	"	184.7	247.9
-3070	"	182.2	243.1
-3050	"	179.8	238.2
3090-3090	59.1	167.1	230.4
-3070	"	164.7	225.5
-3050	"	162.3	220.3
3070-3070	56.7	159.9	220.7
-3050	"	157.3	215.9
3050-3050	54.3	152.7	211.1

NOTE:

- The representation for the pump assembly drawing is for clockwise direction of shaft rotation as viewed from pump drive shaft end. For anti-clockwise rotation of pump shaft, the position of inlet & outlet ports will interchange.
- Unless otherwise specified, the dimension 'X' & 'Y' are identical for both inlet & outlet port positions

ALL DIMENSIONS ARE IN mm UNLESS OTHERWISE SPECIFIED

INSTALLATION DIMENSIONS

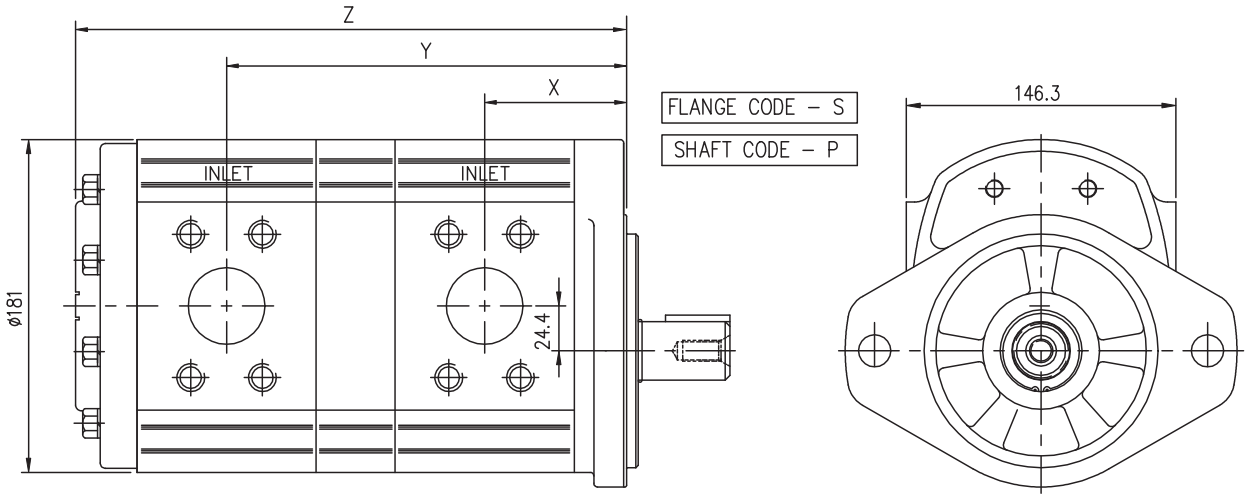

PUMP TYPE 3P - 3P	DIMENSIONS		
	X	Y	Z
3500-3500	98.8	280.2	384.2
-3380	"	270.0	363.6
-3330	"	266.0	355.6
-3300	"	263.4	350.5
-3250	"	259.4	342.6
-3210	"	256.3	336.2
-3180	"	253.9	331.4
-3150	"	251.4	326.5
3380-3380	88.6	249.5	343.1
-3330	"	245.5	335.1
-3300	"	242.9	330.0
-3250	"	239.0	322.1
-3210	"	235.8	315.7
-3180	"	233.4	310.9
-3150	"	231.0	306.0
3330-3330	84.6	237.5	327.1
-3300	"	234.9	322.0
-3250	"	231.0	314.0
-3210	"	227.8	307.7
-3180	"	225.3	302.8
-3150	"	222.9	298.0

PUMP TYPE 3P - 3P	DIMENSIONS		
	X	Y	Z
3300-3300	82.0	229.8	316.8
-3250	"	225.8	308.9
-3210	"	222.6	302.5
-3180	"	220.2	297.7
-3150	"	217.7	292.8
3250-3250	78.0	217.9	301.0
-3210	"	214.7	294.6
-3180	"	212.3	289.8
-3150	"	209.8	285.0
3210-3210	74.8	208.3	288.2
-3180	"	205.9	283.4
-3150	"	203.5	278.6
3180-3180	72.4	201.1	278.6
-3150	"	198.7	273.7
3150-3150	70.0	193.8	268.9

NOTE:

- The representation for the pump assembly drawing is for anti-clockwise direction of shaft rotation as viewed from pump drive shaft end. For clockwise rotation of pump shaft, the position of inlet & outlet ports will interchange.
- Unless otherwise specified, the dimension 'X' & 'Y' are identical for both inlet & outlet port positions

ALL DIMENSIONS ARE IN mm UNLESS OTHERWISE SPECIFIED

TRIPLE
TANDEM PUMP

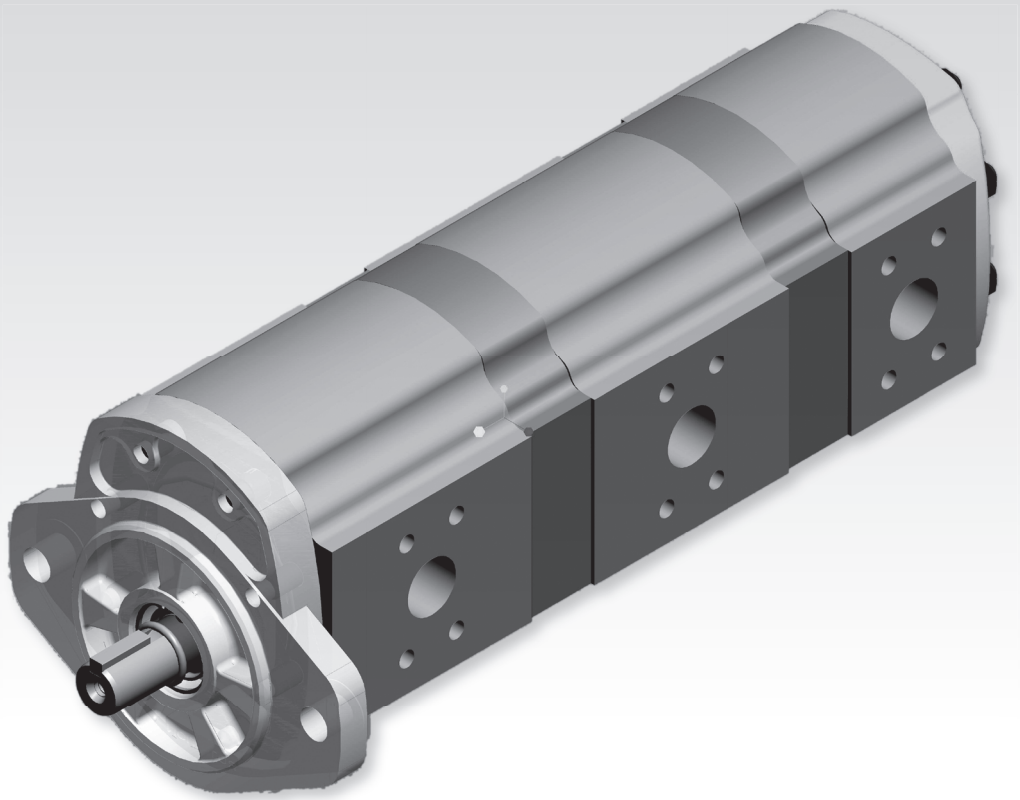

INSTALLATION DIMENSIONS

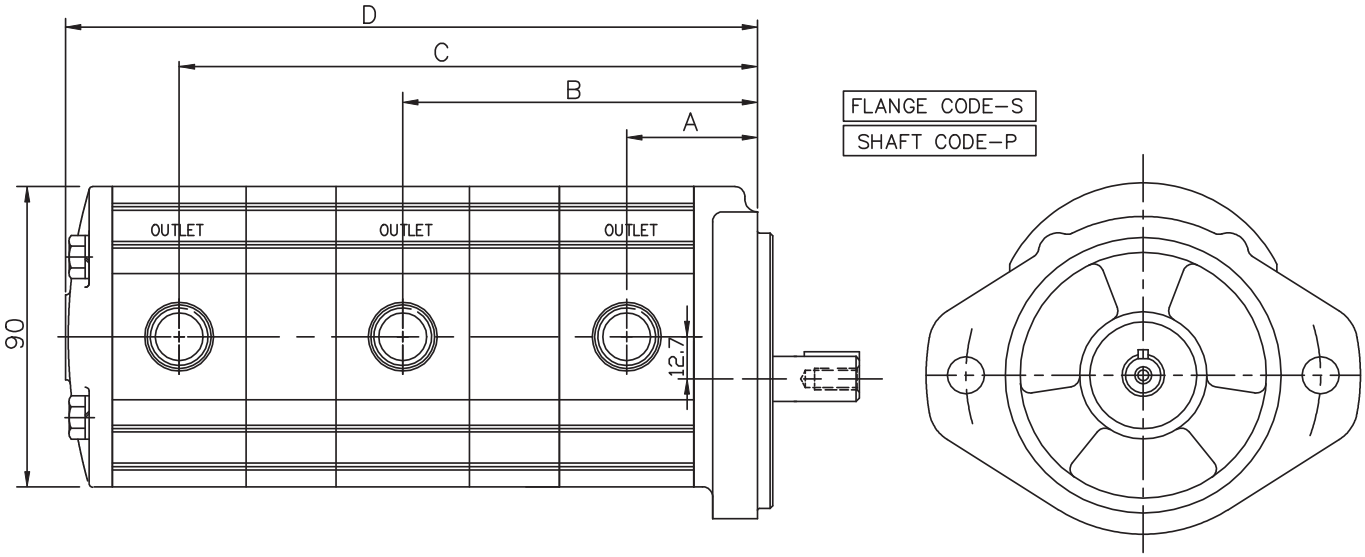

PUMP TYPE 0P - 0P - 0P	DIMENSIONS			
	A	B	C	D
3003-3003-3003	38.1	101.8	165.5	203.6
3004-3004-3004	38.6	103.1	167.6	206.2
3006-3006-3006	39.1	104.8	170.4	209.5
3006-3006-3011	39.1	104.3	172.1	213.0
3008-3008-3008	39.9	107.0	174.1	214.0
3008-3008-3015	39.9	107.0	176.5	218.7
3011-3011-3011	40.9	110.0	179.0	219.9
3011-3011-3006	40.9	110.0	177.3	216.4
3013-3013-3013	41.6	112.0	182.5	224.0
3013-3013-3008	41.6	112.0	180.8	220.6
3015-3015-3015	42.3	114.0	186.0	228.3
3015-3006-3004	42.3	111.0	176.1	214.7

NOTE:

- The representation for the pump assembly drawing is for clockwise direction of shaft rotation as viewed from pump drive shaft end. For anti-clockwise rotation of pump shaft, the position of inlet & outlet ports will interchange.
- Unless otherwise specified, the dimension ‘A’, ‘B’, & ‘C’ are identical for both inlet & outlet port positions

ALL DIMENSIONS ARE IN mm UNLESS OTHERWISE SPECIFIED

INSTALLATION DIMENSIONS

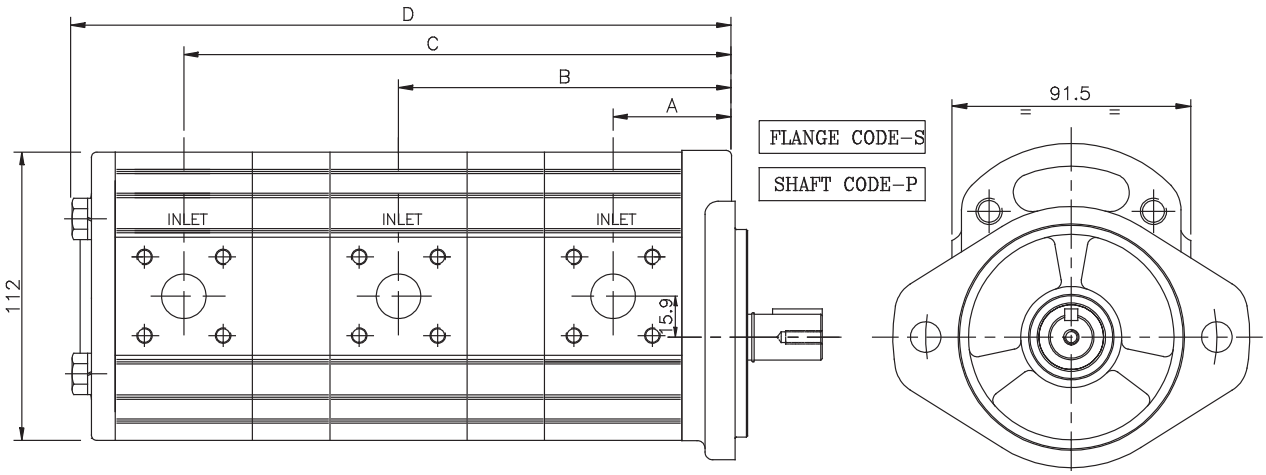

PUMP TYPE 1P - 1P - 1P	DIMENSIONS			
	A	B	C	D
3017-3017-3017	41.8	117.3	192.8	235.6
3028-3020-3017	44.1	122.7	199.0	241.8
3028-3020-3020	"	122.7	199.8	243.3
3028-3028-3028	"	124.2	204.4	249.5
3036-3017-3017	45.6	125.0	200.5	243.3
3036-3020-3020	"	125.8	2029	246.4
3036-3028-3017	"	127.3	205.2	2479
3036-3028-3020	"	127.3	205.9	249.5
3036-3036-3028	"	128.8	210.5	255.6
3036-3036-3020	"	128.8	209.0	252.5
3036-3036-3036	"	128.8	212.0	258.7
3044-3028-3017	54.7	145.4	223.2	266.0
3044-3044-3028	"	156.0	246.7	291.7
3044-3044-3044	"	156.0	257.2	312.8
3052-3036-3036	56.2	150.0	233.2	279.8
3052-3044-3017	"	159.0	247.4	290.2
3052-3052-3017	"	160.5	250.4	293.2
3052-3052-3028	"	160.5	252.8	297.9
3052-3052-3052	"	160.5	264.9	322.1
3060-3017-3017	57.7	149.2	224.7	267.5
3060-3028-3017	"	151.3	229.3	272.1
3060-3052-3028	"	163.6	2559	3010
3060-3060-3052	"	165.1	271.1	328.2
3060-3060-3060	"	165.1	272.6	331.3
3072-3036-3036	60.1	157.7	240.9	287.5
3072-3072-3060	"	172.1	281.8	340.5
3072-3072-3072	"	172.1	284.1	341.5
3090-3017-3017	63.4	160.5	236.0	278.8
3090-3036-3020	"	164.3	244.5	288.0
3090-3090-3090	"	182.0	300.7	365.0

NOTE:

- The representation for the pump assembly drawing is for anti-clockwise direction of shaft rotation as viewed from pump drive shaft end. For clockwise rotation of pump shaft, the position of inlet & outlet ports will interchange.
- Unless otherwise specified, the dimension 'A', 'B', & 'C' are identical for both inlet & outlet port positions

ALL DIMENSIONS ARE IN mm UNLESS OTHERWISE SPECIFIED

INSTALLATION DIMENSIONS

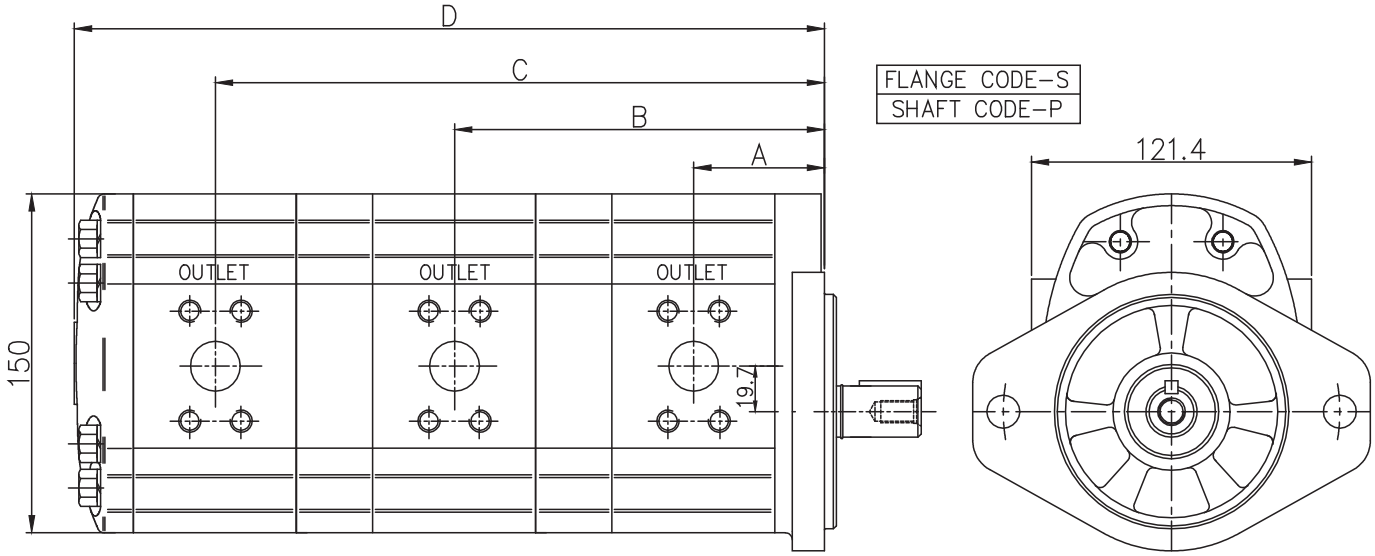

PUMP TYPE 2P - 2P - 2P	DIMENSIONS			
	A	B	C	D
3070 3070 3050	56.7	159.9	260.7	319.1
3090 3070 3070	59.1	164.7	268.0	328.8
3090 3090 3090	59.1	167.1	275.2	338.4
3105 3105 3090	67.9	193.4	310.3	373.5
3120 3050 3050	69.7	183.5	282.0	340.3
3120 3070 3050	69.7	186.0	286.8	345.2
3120 3070 3070	69.7	186.0	289.2	350.0
3120 3120 3050	69.7	199.0	312.8	371.2
3120 3120 3070	69.7	199.0	315.2	376.0
3120 3120 3120	69.7	199.0	328.2	402.1
3146 3146 3050	72.8	208.1	325.0	383.4
3146 3146 3090	72.8	208.1	329.8	393.0
3146 3105 3105	72.8	203.2	328.8	400.8
3146 3146 3146	72.8	208.1	343.5	420.3
3158 3158 3158	74.3	212.7	351.1	429.6
3220 3105 3105	81.7	221.1	346.7	418.7
3220 3220 3146	81.7	235.0	379.3	456.2

NOTE:

- The representation for the pump assembly drawing is for clockwise direction of shaft rotation as viewed from pump drive shaft end. For anti-clockwise rotation of pump shaft, the position of inlet & outlet ports will interchange.
- Unless otherwise specified, the dimension ‘A’, ‘B’, & ‘C’ are identical for both inlet & outlet port positions

ALL DIMENSIONS ARE IN mm UNLESS OTHERWISE SPECIFIED

INSTALLATION DIMENSIONS

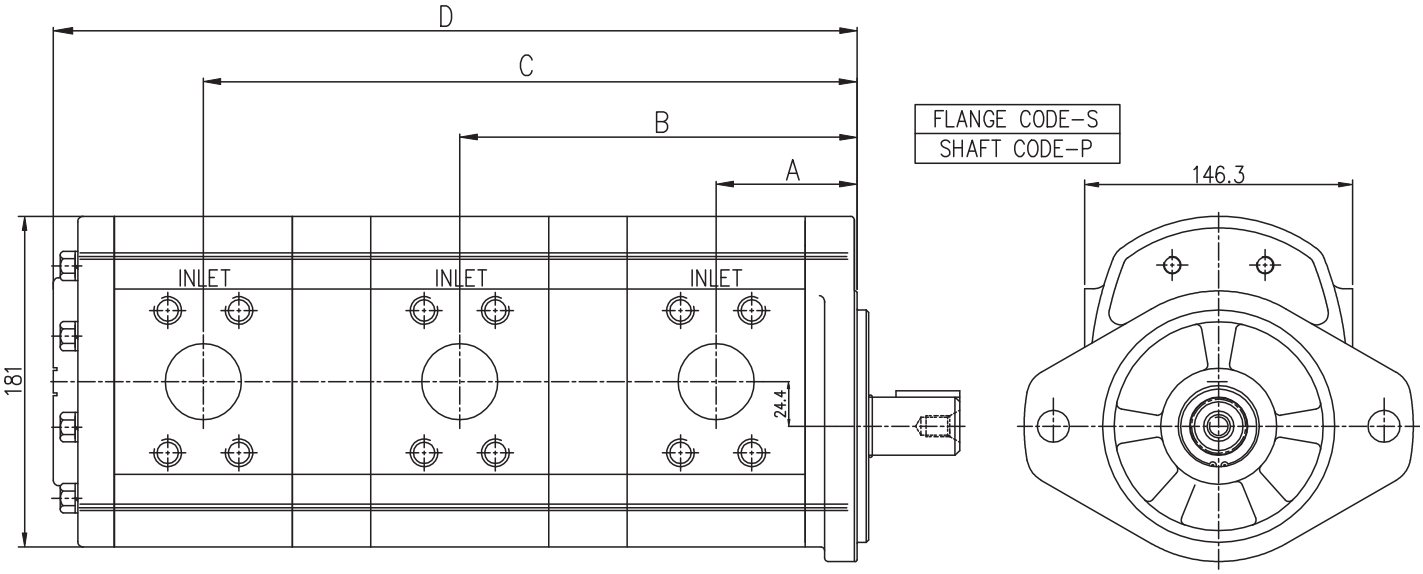

PUMP TYPE 3P - 3P - 3P	DIMENSIONS			
	A	B	C	D
3150 3150 3150	70.0	193.8	317.5	392.6
3210 3210 3150	74.8	208.3	336.9	412.0
3210 3210 3180	74.8	208.3	339.3	416.8
3250 3250 3150	78.0	217.8	349.6	424.7
3250 3250 3250	78.0	217.8	357.6	440.7
3300 3210 3180	82.0	222.5	353.6	431.1
3300 3300 3150	82.0	229.7	365.4	440.5
3300 3300 3210	82.0	229.7	370.2	450.2
3330 3250 3210	84.6	230.9	367.5	447.4
3330 3330 3180	84.6	737.4	378.7	455.7
3330 3330 3250	84.6	237.4	383.8	466.9
3330 3330 3330	84.6	237.4	390.3	480.0
3380 3180 3150	88.6	233.3	359.5	434.6
3380 3180 3180	88.6	233.3	361.9	439.4
3380 3300 3210	88.6	242.9	383.4	463.3
3380 3330 3250	88.6	245.4	391.8	474.9
3380 3380 3210	88.6	249.5	396.6	476.5
3380 3380 3250	88.6	249.5	399.8	482.9
3380 3380 3380	88,6	249,5	410,3	504.0
3500 3500 3210	98.8	280.2	437.6	517.6
3500 3500 3250	98.8	280.2	440.8	523.9
3500 3500 3500	98.8	280.2	461.6	565.5

NOTE:

- The representation for the pump assembly drawing is for anti-clockwise direction of shaft rotation as viewed from pump drive shaft end. For clockwise rotation of pump shaft, the position of inlet & outlet ports will interchange.
- Unless otherwise specified, the dimension 'A', 'B', & 'C' are identical for both inlet & outlet port positions

ALL DIMENSIONS ARE IN mm UNLESS OTHERWISE SPECIFIED

This page has been intentionally left blank

CROSS FRAME
PUMP

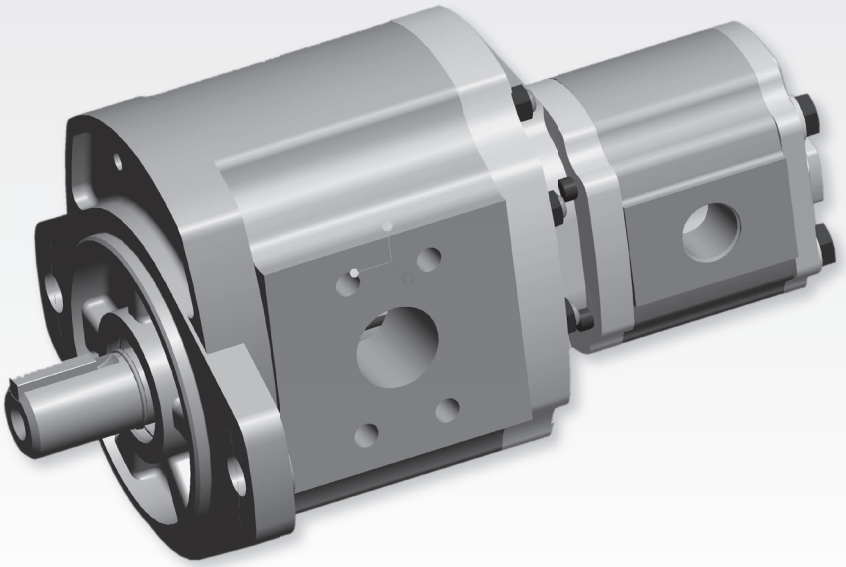

INSTALLATION DIMENSIONS

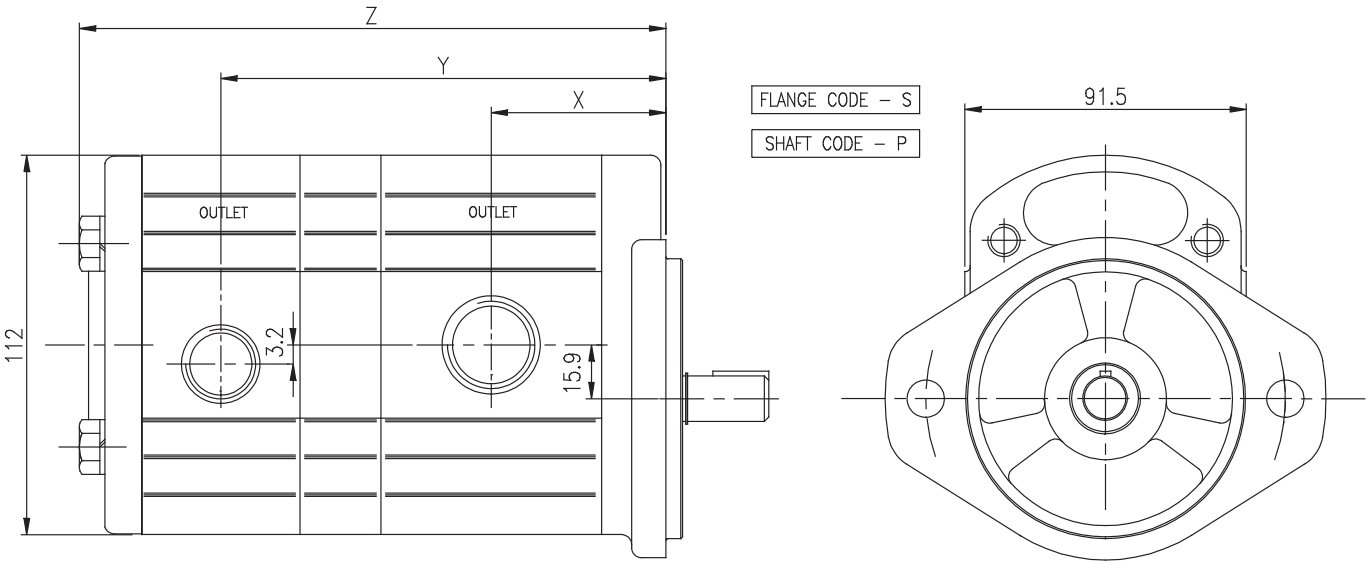

PUMP TYPE 1P - 0P	DIMENSIONS		
	X	Y	Z
3017-3003	41.8	108.6	147.7
3017-3004	"	109.0	148.6
3017-3006	"	109.6	149.7
3017-3008	"	110.3	151.2
3017-3011	"	111.3	153.2
3017-3013	"	112.0	154.5
3017-3015	"	112.7	155.9
3020-3003	42.6	110.1	149.3
3020-3004	"	110.6	150.1
3020-3006	"	111.1	151.3
3020-3008	"	111.9	152.7
3020-3011	"	112.9	154.7
3020-3013	"	113.5	156.1
3020-3015	"	114.2	157.4
3020-3019	"	115.4	159.8
3028-3003	44.1	113.2	152.3
3028-3004	"	113.6	153.2
3028-3006	"	114.2	154.3
3028-3008	"	114.9	155.8
3028-3011	"	115.9	157.8
3028-3013	"	116.6	159.1
3028-3015	"	117.3	160.5
3036-3003	45.7	116.3	155.4
3036-3004	"	116.7	156.3

PUMP TYPE 1P - 0P	DIMENSIONS		
	X	Y	Z
3036-3006	45.7	117.3	157.4
3036-3008	"	118.0	158.9
3036-3011	"	119.0	160.9
3036-3013	"	119.7	162.2
3036-3015	"	120.4	163.6
3036-3019	"	121.5	166.0
3036-3025	"	12.3.5	169.8
3044-3003	54.7	134..3	17.3.5
3044-3004	"	1.34.8	174.3
3044-3006	"	1.35.3	175.5
3044-3008	"	1.36.1	176.9
3044-3011	"	1.37.1	178.9
3044-3013	"	1.37.8	180..3
3044-3015	"	1.38.4	181.7
3044-3019	"	1.39.6	184.0
3044-3025	"	141.5	187.9
3052-3003	56.2	137.4	176.5
3052-3004	"	1.37.9	177.4
3052-3006	"	1.38.4	178.5
3052-3008	"	139.1	180.0
3052-3011	"	140.1	182.0
3052-3013	"	140.8	18.3.4
3052-3015	"	141.5	184.7
3060-3003	57.8	140.5	179.6

PUMP TYPE 1P - 0P	DIMENSIONS		
	X	Y	Z
3060-3004	57.8	140.9	180.5
3060-3006	"	141.5	181.6
3060-3008	"	142.2	183.1
3060-3011	"	143.2	185.1
3060-3013	"	143.9	186.4
3060-3015	"	144.6	187.8
3060-3019	"	145.7	190.2
3060-3025	"	147.7	194.0
3072-3003	60.1	145.1	184.2
3072-3004	"	145.5	185.1
3072-3006	"	146.1	186.2
3072-3008	"	146.8	187.7
3072-3011	"	147.8	189.7
3072-3013	"	148.5	191.0
3072-3015	"	149.2	192.4
3072-3019	"	150.3	194.8
3072-3025	"	152.3	198.6
3090-3003	63.4	151.7	190.9
3090-3004	"	152.2	191.7
3090-3006	"	152.7	192.9
3090-3008	"	153.4	194 . .3
3090-3011	"	154.4	196 . .3
3090-3013	"	155.1	197.7
3090-3015	"	155.8	199.1

NOTE:

- The representation for the pump assembly drawing is for clockwise direction of shaft rotation as viewed from pump drive shaft end. For anti-clockwise rotation of pump shaft, the position of inlet & outlet ports will interchange.
- Unless otherwise specified, the dimension 'X' & 'Y' are identical for both inlet & outlet port positions

ALL DIMENSIONS ARE IN mm UNLESS OTHERWISE SPECIFIED

INSTALLATION DIMENSIONS

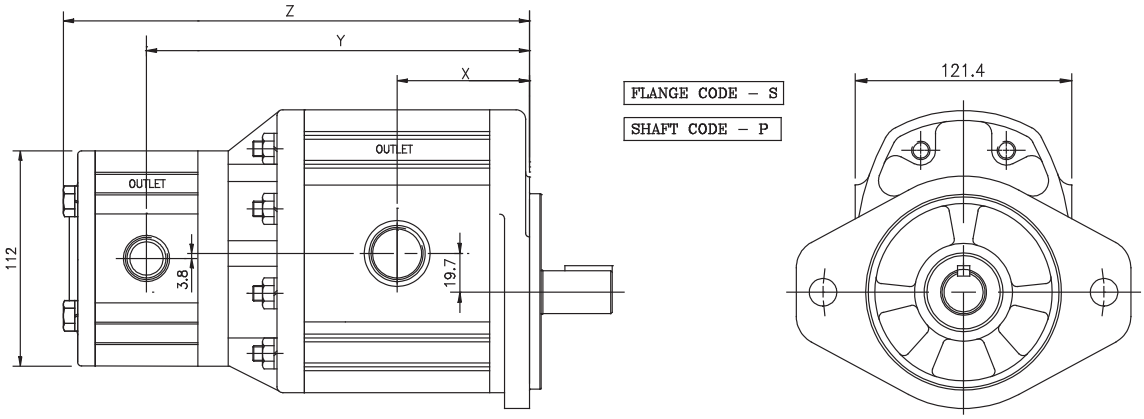

PUMP TYPE 2P - 1P	DIMENSIONS		
	X	Y	Z
3220-3090	81.7	241.6	305.9
-3072	"	238.3	299.3
-3060	"	236.0	294.7
-3052	"	234.4	291.6
-3044	"	232.9	288.5
-3036	"	2239	270.5
-3028	"	222.3	267.4
-3020	"	220.8	264.3
-3017	"	220.0	262.8
3158-3090	74.3	226.8	291.1
-3072	"	223.4	284.4
-3060	"	221.1	279.8
-3052	"	219.6	276.8
-3044	"	218.1	273.7
-3036	"	209.1	255.6
-3028	"	207.5	252.6
-3020	"	206.0	249.5
-3017	"	205.2	247.9
3146-3090	72.8	223.7	288.0
-3072	"	220.4	281.4
-3060	"	218.1	276.8
-3052	"	216.5	273.7
-3044	"	215.0	270.6
-3036	"	206.0	252.6
-3028	"	204.4	249.5
-3020	"	202.9	246.4
-3017	"	202.1	244.9
3120-3090	69.7	217.6	281.9
-3072	"	214.3	275.3
-3060	"	212.0	270.7
-3052	"	210.4	267.6
-3044	"	208.9	264.5
-3036	"	199.9	246.5

PUMP TYPE 2P - 1P	DIMENSIONS		
	X	Y	Z
3120-3028	69.7	198.3	243.4
-3020	"	196.8	240.3
-3017	"	196.0	238.8
3105-3090	67.9	213.9	278.2
-3072	"	210.6	271.6
-3060	"	208.3	267.0
-3052	"	206.8	263.9
-3044	"	205.2	260.8
-3036	"	196.2	242.8
-3028	"	194.6	239.7
-3020	"	193.1	236.6
-3017	"	192.3	235.1
3090-3090	59.1	196.4	260.7
-3072	"	193.1	254.1
-3060	"	190.8	249.5
-3052	"	189.2	246.4
-3044	"	187.7	243.3
-3036	"	178.7	225.3
-3028	"	177.1	222.2
-3020	"	175.6	219.1
-3017	"	174.8	217.6
3070-3060	56.7	185.9	244.7
-3052	"	184.4	241.6
-3044	"	182.9	238.5
-3036	"	173.8	220.4
-3028	"	172.3	217.4
-3020	"	170.8	214.3
-3017	"	170.0	212.7
3050-3044	54.3	178.0	233.7
-3036	"	169.0	215.6
-3028	"	167.5	212.5
-3020	"	165.9	209.5
-3017	"	165.2	207.9

NOTE:

- The representation for the pump assembly drawing is for clockwise direction of shaft rotation as viewed from pump drive shaft end. For anti-clockwise rotation of pump shaft, the position of inlet & outlet ports will interchange.
- Unless otherwise specified, the dimension 'X' & 'Y' are identical for both inlet & outlet port positions

ALL DIMENSIONS ARE IN mm UNLESS OTHERWISE SPECIFIED

INSTALLATION DIMENSIONS

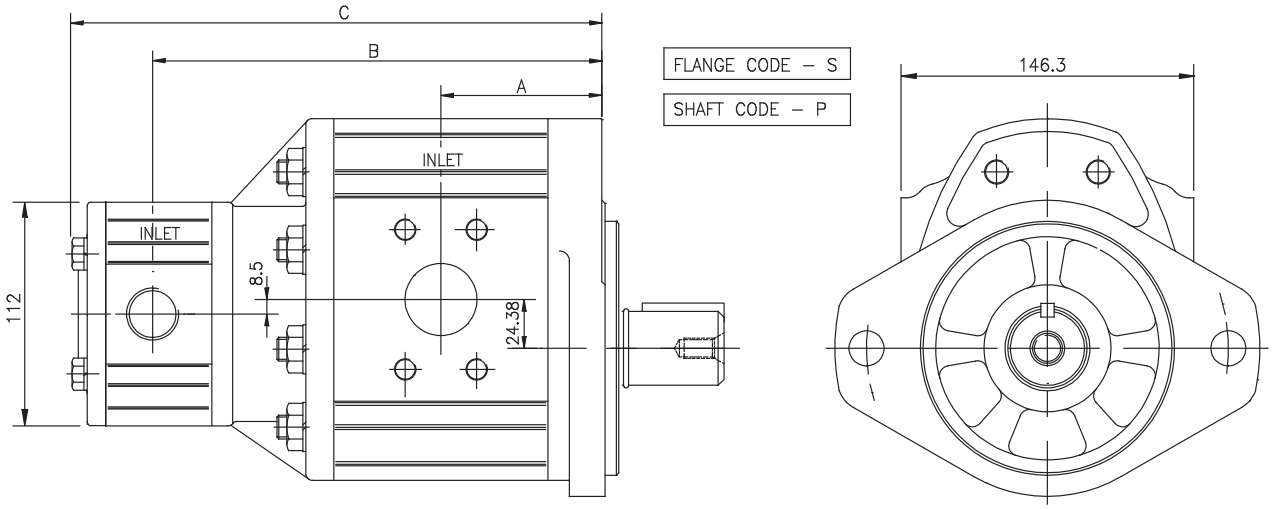

PUMP TYPE 3P - 1P	DIMENSIONS		
	X	Y	Z
3150-3017	70.0	195.4	238.2
3150-3018	"	195.5	238.4
3150-3020	"	196.1	239.7
3150-3028	"	197.7	242.8
3150-3036	"	199.2	245.8
3150 3044	"	208.3	263.9
3150-3052	"	209.8	267.0
3150-3060	"	211.3	270.0
3150 3072	"	213.6	274.6
3150-3090	"	217.0	281.3
3180-3017	72.5	200.2	243.0
3180-3018	"	200.4	243.3
3180-3020	"	201.0	244.5
3180-3028	"	202.5	247.6
3180 3036	"	204.1	250.7
3180-3044	"	213.1	268.7
3180-3052	"	214.6	271.8
3180 3060	"	216.2	274.9
3180-3072	"	218.5	279.5
3180-3090	"	221.8	286.1
3210-3017	74.9	205.1	247.8
3210-3018	"	205.2	248.1
3210-3020	"	205.8	249.4
3210-3028	"	207.4	252.4
3210-3036	"	208.9	255.5
3210-3044	"	218.0	273.6
3210-3052	"	219.5	276.6
3210-3060	"	221.0	279.8
3210-3072	"	223.3	284.3
3210 3090	"	226.6	291.0

PUMP TYPE 3P - 1P	DIMENSIONS		
	X	Y	Z
3250-3017	78.1	211.4	254.2
3250-3018	"	211.6	254.5
3250-3020	"	212.2	255.7
3250-3028	"	213.7	258.1
3250-3036	"	215.3	261.9
3250-3044	"	224.3	280.0
3250-3052	"	225.8	283.0
3250-3060	"	227.4	286.1
3250-3072	"	229.7	290.7
3250-3090	"	233.0	297.4
3300-3017	82.0	219.3	262.1
3300-3018	"	219.5	262.4
3300-3020	"	220.1	263.6
3300-3028	"	221.6	266.7
3300-3036	"	223.2	269.8
3300-3044	"	232.2	287.8
3300-3052	"	233.7	290.9
3300-3060	"	235.3	294.0
3300-3072	"	237.6	298.6
3300-3090	"	240.9	305.2
3330-3017	84.6	224.5	267.2
3330-3018	"	224.6	267.5
3330-3020	"	225.3	268.8
3330-3028	"	226.8	271.9
3330-3036	"	228.3	274.9
3330-3044	"	237.4	293.0
3330-3052	"	238.9	296.1
3330-3060	"	240.4	299.1
3330-3072	"	242.7	303.7
3330-3090	"	246.1	310.4

PUMP TYPE 3P - 1P	DIMENSIONS		
	X	Y	Z
3380-3017	88.6	232.5	275.3
3380-3018	"	232.7	275.6
3380 3020	"	233.3	276.8
3380-3028	"	234.8	279.9
3380-3036	"	236.4	282.9
3380 3044	"	245.4	301.0
3380 3052	"	246.9	304.1
3380-3060	"	248.5	307.2
3380 3072	"	250.8	311.8
3380-3090	"	254.1	318.4
3500-3017	98.9	253.0	295.8
3500-3018	"	253.2	296.1
3500-3020	"	253.8	297.3
3500-3028	"	255.3	300.4
3500 3036	"	256.9	303.5
3500-3044	"	265.9	321.5
3500-3052	"	267.4	324.6
3500 3060	"	269.0	327.7
3500-3072	"	271.3	332.3
3500-3090	"	274.6	338.9

NOTE:

- The representation for the pump assembly drawing is for anti-clockwise direction of shaft rotation as viewed from pump drive shaft end. For clockwise rotation of pump shaft, the position of inlet & outlet ports will interchange.
- Unless otherwise specified, the dimension 'A' & 'B' are identical for both inlet & outlet port positions

ALL DIMENSIONS ARE IN mm UNLESS OTHERWISE SPECIFIED

INSTALLATION DIMENSIONS

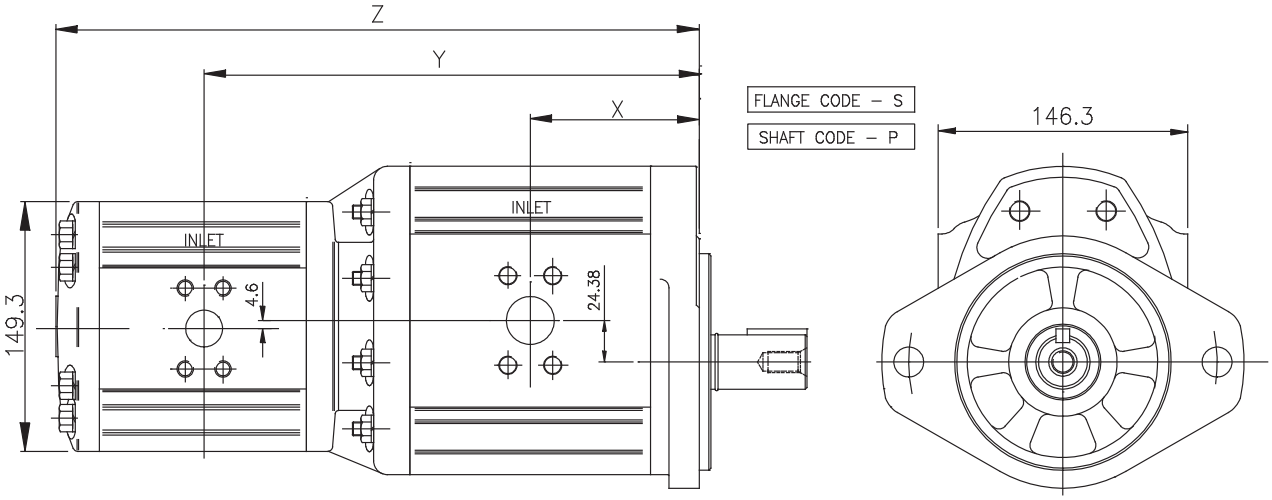

PUMP TYPE 3P - 2P	DIMENSIONS		
	X	Y	Z
3500-3220	98.9	290.4	376.2
-3158	"	283.0	361.4
-3146	"	281.4	358.3
-3120	"	278.4	352.2
-3105	"	276.5	348.5
-3090	"	267.8	331.0
-3070	"	265.4	326.2
-3050	"	263.0	321.4
3380-3220	88.6	269.9	355.7
-3158	"	262.5	340.9
-3146	"	260.9	337.8
-3120	"	257.9	331.7
-3105	"	256.0	328.0
-3090	"	247.3	310.5
-3070	"	2449	305.7
-3050	"	242.4	300.8
3330-3220	84.6	261.9	347.7
-3158	"	254.4	332.9
-3146	"	252.9	329.8
-3120	"	249.9	323.7
-3105	"	248.0	320.0
-3090	"	239.2	302.5
-3070	"	236.8	297.7
-3050	"	234.4	292.8
3300-3220	82.0	256.7	342.5
-3158	"	249.3	327.7
-3146	"	247.7	324.6
-3120	"	244.7	318.5
-3105	"	242.8	314.8
-3090	"	234.0	297.3
-3070	"	231.7	292.5
-3050	"	229.3	287.7

PUMP TYPE 3P - 2P	DIMENSIONS		
	X	Y	Z
3250-3220	78.1	248.8	334.6
-3158	"	241.4	319.8
-3146	"	239.8	316.7
-3120	"	236.8	310.6
-3105	"	234.9	306.9
-3090	"	226.2	289.4
-3070	"	223.7	284.6
-3050	"	221.4	279.8
3210-3158	749	235.0	313.4
-3146	"	233.5	310.4
-3120	"	230.4	304.3
-3105	"	228.6	300.6
-3090	"	219.8	283.1
-3070	"	217.4	278.2
-3050	"	215.0	273.4
3180-3158	72.5	230.2	308.6
-3146	"	228.6	305.5
-3120	"	225.6	299.4
-3105	"	223.8	295.7
-3090	"	215.0	278.2
-3070	"	213.6	273.4
-3050	"	210.2	268.6
3150-3146	70.0	223.8	300.7
-3120	"	220.7	294.6
-3105	"	218.9	290.9
-3090	"	210.1	273.4
-3070	"	207.7	268.5
-3050	"	205.3	263.7

NOTE:

- The representation for the pump assembly drawing is for anti-clockwise direction of shaft rotation as viewed from pump drive shaft end. For clockwise rotation of pump shaft, the position of inlet & outlet ports will interchange.
- Unless otherwise specified, the dimension 'X' & 'Y' are identical for both inlet & outlet port positions

ALL DIMENSIONS ARE IN mm UNLESS OTHERWISE SPECIFIED

INSTALLATION DIMENSIONS

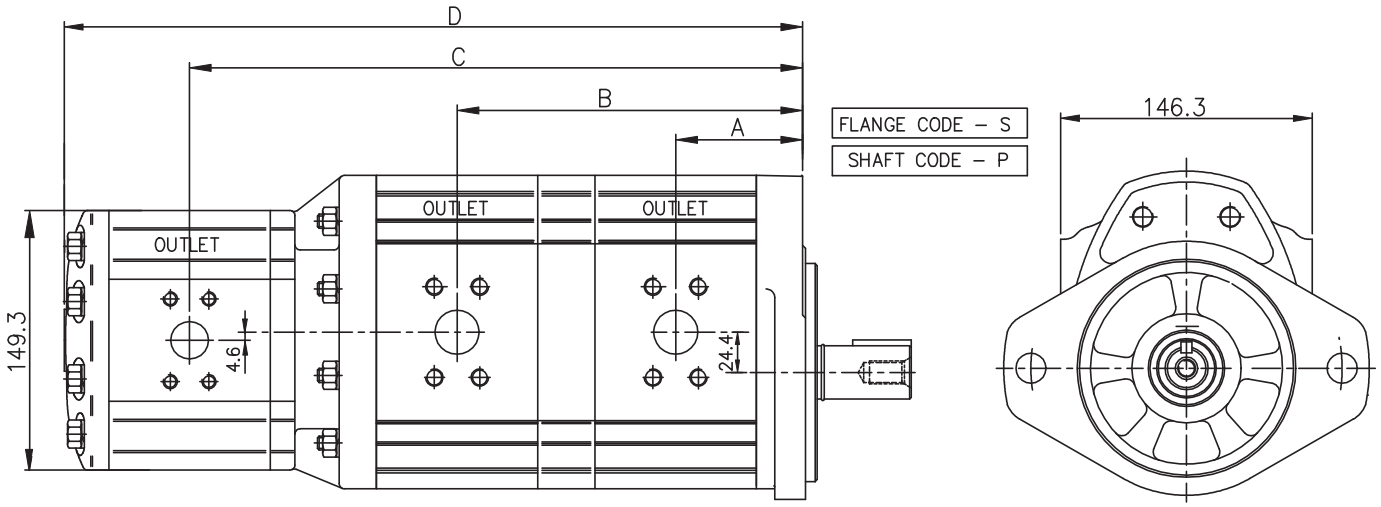

Sl. No.	PUMP TYPE 3P - 3P - 3P	DIMENSIONS			
		A	B	C	D
01	3P 3P 2P 3150 3150 3120	70.0	193.8	344.5	418.3
02	3P 3P 2P 3150 3150 3090	70.0	193.8	334.0	397.1
03	3P 3P 2P 3180 3180 3050	72.5	201.1	338.8	397.2
04	3P 3P 2P 3180 3180 3070	72.5	201.1	341.2	402.0
05	3P 3P 2P 3210 3210 3070	74.8	208.3	350.9	411.7
06	3P 3P 2P 3210 3210 3090	74.8	208.3	353.3	416.5
07	3P 3P 2P 3210 3210 3105	74.8	208.3	362.0	434.0
08	3P 3P 2P 3210 3210 3146	74.8	208.3	366.9	443.8
09	3P 3P 2P 3250 3250 3090	78.0	217.9	366.0	429.2
10	3P 3P 2P 3330 3330 3158	84.6	237.6	407.3	485.7
11	3P 3P 2P 3380 3180 3050	88.6	233.4	371.0	429.5

NOTE:

- The representation for the pump assembly drawing is for clockwise direction of shaft rotation as viewed from pump drive shaft end. For anti-clockwise rotation of pump shaft, the position of inlet & outlet ports will interchange.
- Unless otherwise specified, the dimension 'A', 'B' & 'C' are identical for both inlet & outlet port positions

ALL DIMENSIONS ARE IN mm UNLESS OTHERWISE SPECIFIED

CAST IRON
PUMP

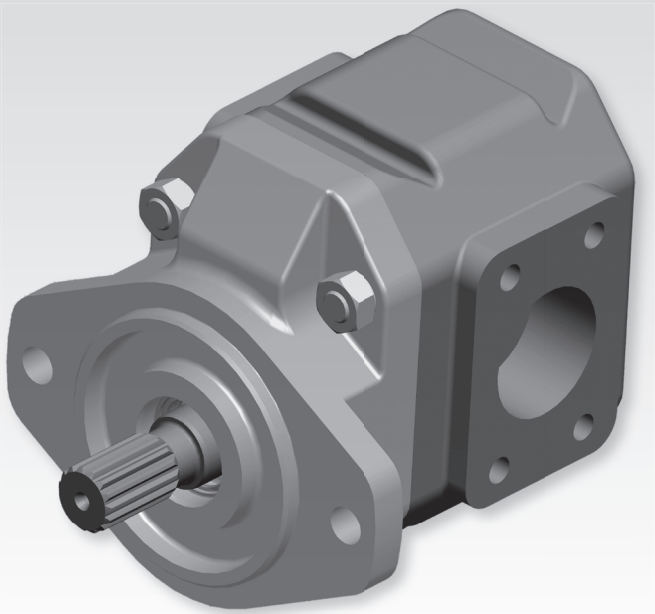

HIGH PRESSURE

XT Pump Series

CAST IRON GEAR PUMP

Dynamatic Technologies Limited, the largest producer of hydraulic gear pumps in Asia and one of the top five world-wide, introduces the XT Series of Pumps. The XT Series of Pumps has been developed to meet the demanding work environments of earth-moving applications.

The Salient features of the XT Series of Pumps are detailed below.

Pump Sizes: The XT Series of Pumps are available in sizes ranging from 30 to 100 cc per rev.

High Grade Cast Iron: to meet the high performance requirements of your application, high grade cast iron is used as pump body, flange and cover material. Self-lubricating, PTFE lined bushes are used, to ensure:

- Low coefficient of friction
- Good sliding characteristics
- Suitability for dry running
- High chemical resistance
- Long life and minimal maintenance

High Pressure: The XT Series of Pumps have capabilities to withstand maximum operating pressures of 225 Bar, to meet your exacting requirements.

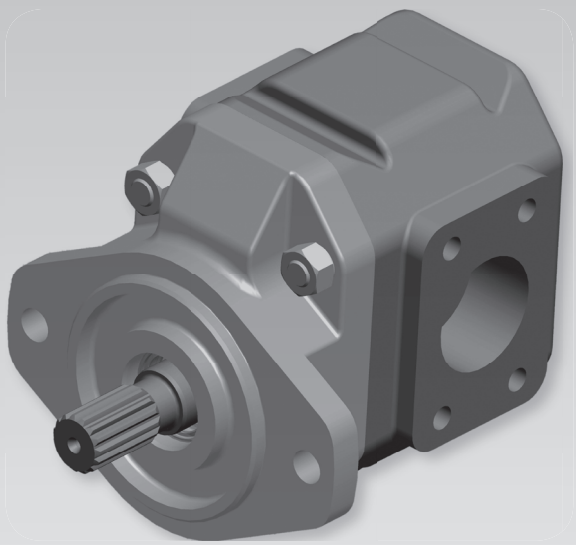

Quality: The use of statistical process control techniques during all phases of manufacturing ensures the use of high quality components. All pumps in the XT Series are performance tested to achieve total quality.

Options: The options in the XT Series include two different shaft types viz. parallel and Spline and various types of mounting flanges, which provide optimum flexibility in connecting to power source of your equipment. Also, the pump can be built of either 2 OR 3 sections depending upon the space availability, port configuration, etc.

PUMP CONSTRUCTION

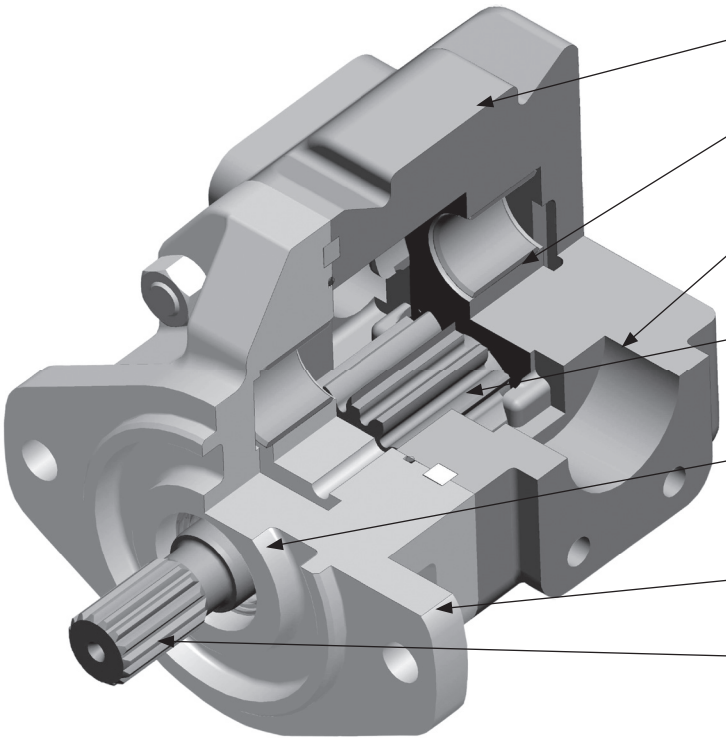

GEAR HOUSING: High strength cast iron housing

PRESSURE PLATES: Designed for high efficiency and low noise levels

PORTS: Various possibilities of side/rear locations. Also, with SAE/Threaded ports

GEARS: Single Piece gear shaft designed specifically to give best possible performance and low ripple pulsation

OIL SEAL: High pressure oil seals ensure prefect oil/air tightness for installation above or below tank oil level

MOUNTING FLANGES: Several Alternatives available as Standard including bearing option

DRIVE SHAFTS: Choice of Spline Parallel Drives Shafts

Construction	External Gear Type Pump
Mounting	SAE Flange
Port Connections	Threaded and Flange Type
Direction of Rotation	Anti-Clockwise / Clockwise
Inlet Pressure Range	0.02 Bar
Fluid Temperature Range	-20°C to 70°C
Fluid	Mineral Oil Based, Fire Resistant Hydraulic Fluid to ISO/DIN Std.
Viscosity Range	15-100 Cst
Filtration Requirement	NAS 1638 – Level 8

PUMP SPECIFICATIONS

PUMP TYPE	DISPLACEMENT in cc/rev	MAXIMUM FLOW in Ltr/Min @1500 rpm	RPM		MAX. CONT PRESSURE (BAR)	MAX. PEAK PRESSURE (BAR)
			Min	Max		
XT30	30	45	650	3000	225	260
XT43	43	64.5	650	3000	225	260
XT50	50	75	650	3000	225	260
XT55	55	82.5	650	3000	225	260
XT65	65	97.5	600	2500	215	245
XT70	70	105	600	2500	215	245
XT85	85	127.5	600	2500	215	245
XT100	100	150	600	2500	215	245

PUMP CODIFICATION

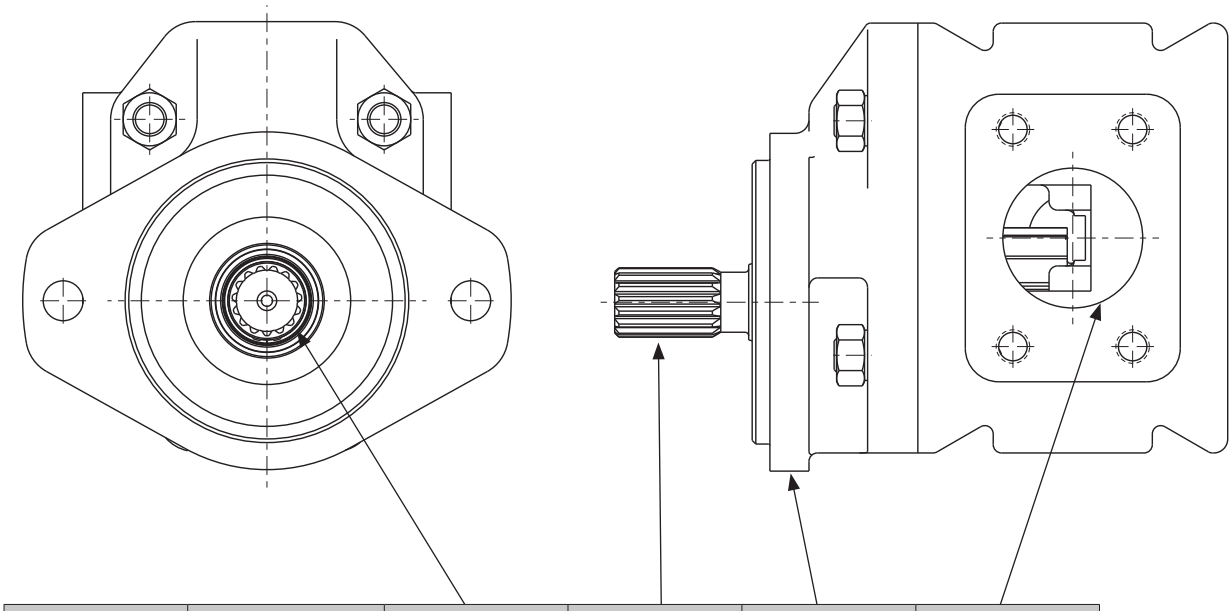

Frame	Flow Size	Rotation	Shaft	Flange	Port Code
XI	-(CC)	- - -	- - -	- - -	- - -

Flow	Rotation		Shaft Code		Flange Code		Port Code
30	A	Anti-clockwise	P	Parallel Shaft	S	2 Bolts, SAE Mounting Type	Split Flange Port
43							
45	C	Clockwise	S	Spline Shaft	D	4 Bolts, SAE Mounting Type	Straight Threaded Port
50							
55							Pipe Threaded Port
65							
70							
85							
100							

PUMP INSTALLATION DIMENSIONS

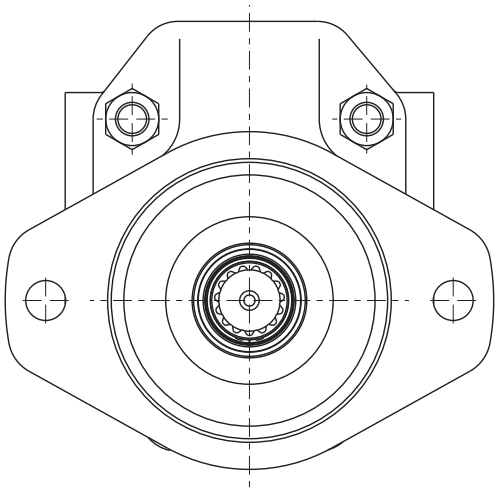

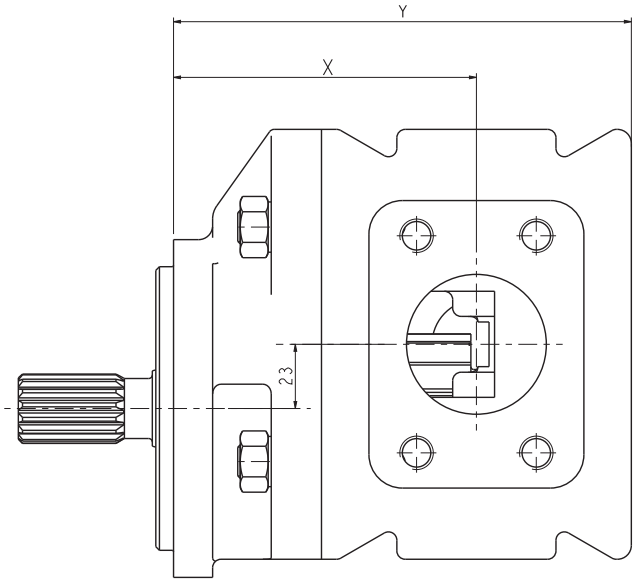

PUMP TYPE	DIMENSIONS	
	X	Y
XT30	68.8	84.9
XT40	72.1	91.2
XT45	73.4	93.8
XT50	74.7	96.4
XT55	76.6	100.2
XT65	80.0	107.0
XT70	81.6	110.3
XT85	86.4	119.8
XT100	91.2	129.3

NOTE:
- Unless otherwise specified, the dimension 'X' is identical for both inlet & outlet port positions.

FLANGE CONFIGURATION

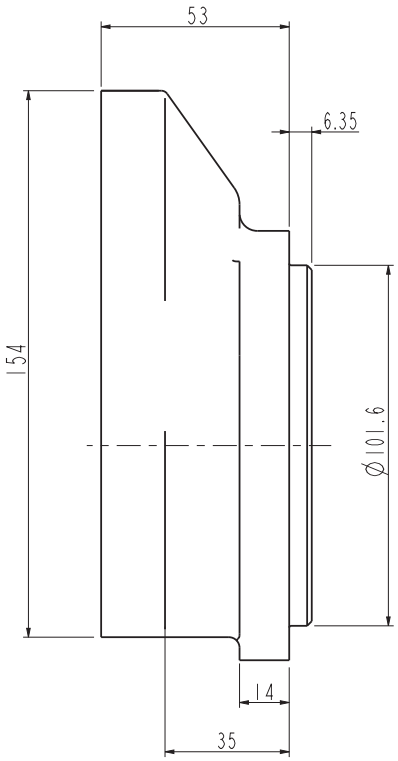

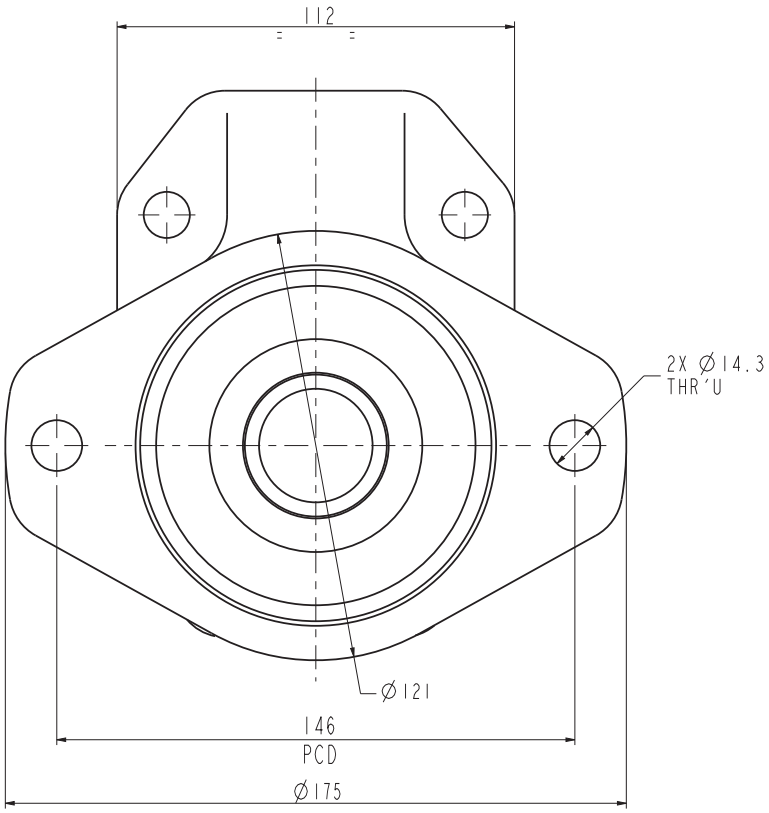

SPLIT FLANGE PORT CODE - S

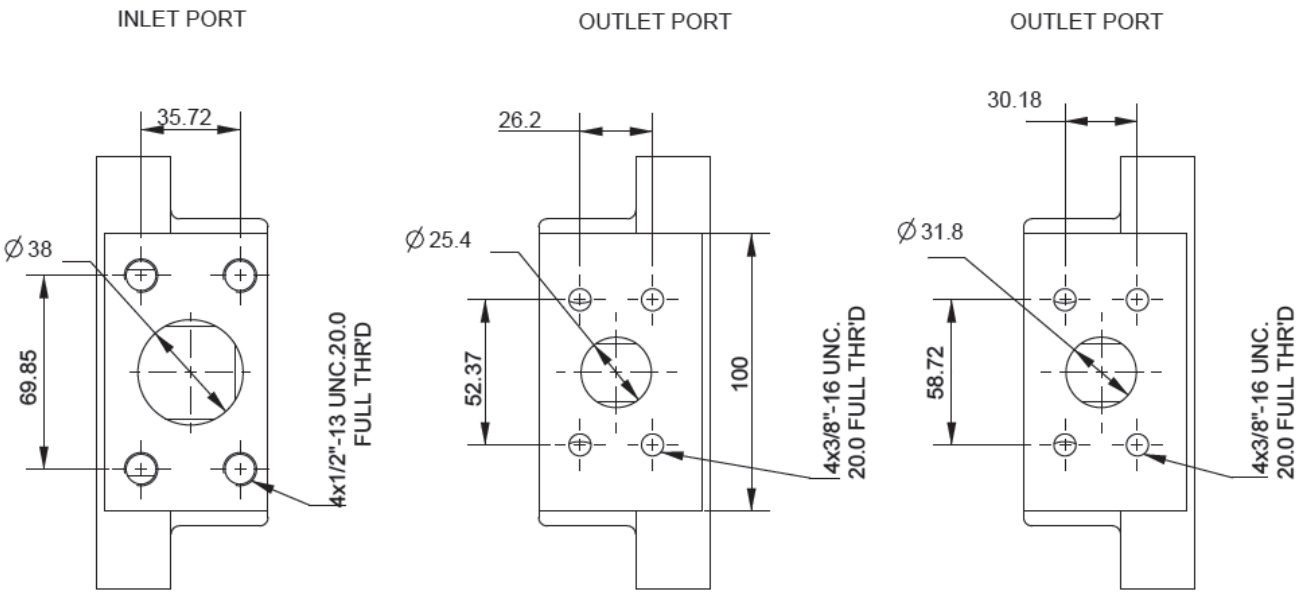

ALL TYPES

PUMP TYPES XT 45 TO XT 70

PUMP TYPES XT 90 TO XT100

NOTE:

- Inlet & Outlet port details other than mentioned above can be considered based on feasibility.

ALL DIMENSIONS ARE IN mm UNLESS OTHERWISE SPECIFIED

GEAR MOTOR

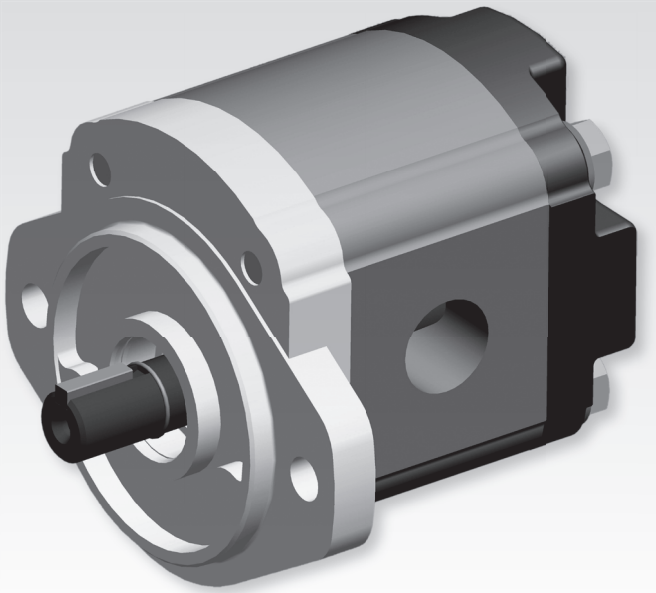

HYDRAULIC GEAR

1DR Motor Series

HYDRAULIC GEAR MOTOR

Dynamatic gear motors in 1DR series have a range of uni and bi-rotational high performance gear motors to meet the needs of both mobile and industrial market sectors. These units are available with wide choice of flow sizes, installation features and performance variables.

Gear motors are offered in a range of displacement from 6.0cm3/rev to 27cm3/rev. Motors are available in two and three port versions and the company specializes in supplying units to special order instructions (subject to quantity).

High volumetric efficiencies produced by Dynamatic motors are achieved in part by careful attention to control of gear tip leakage. The body to gear geometry is arranged such that during the running in test cycle, to which every unit is subjected, the gears cut perceptible tracks in the body. This results in virtually zero clearance between the gear tips and body producing a near perfect tip seal under running conditions.

Floating composite bushes are used which house the bearing liners and provide a face seal to the gears. This efficient seal is achieved by pressure loading precise areas of the bush rear face with fluid at working pressure. Specially developed and patented bush seals prevent high pressure entering the drain system around and between the journal bearings, in addition to separating high and low pressure areas at the bush rear face.

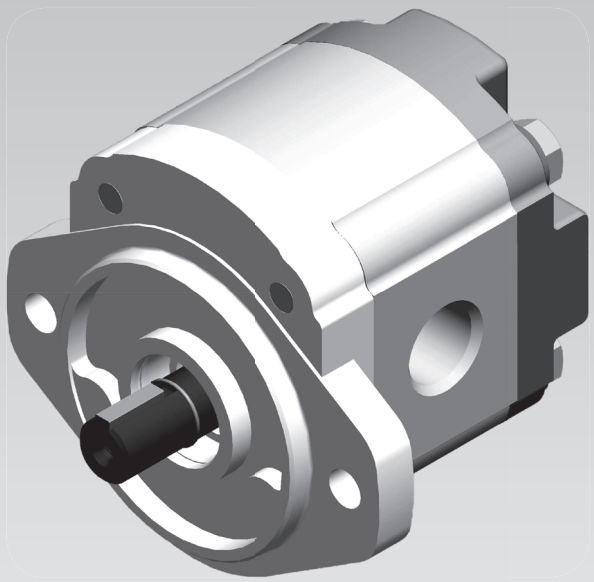

All motors and pumps have the same advanced pressure balancing system that effectively satisfies the conflicting requirements of bush loading resulting from uni and bi-rotational units when they are connected in single or series mode. the pressure balancing system ensures a minimum nett on load mechanical efficiency, yet the same time balancing system ensures a minimum nett on-load for high mechanical efficiency ,yet at the same time balancing varying pressure distribution across the bush face. Thus contributing to high volumetric performance of gear pump and motors.

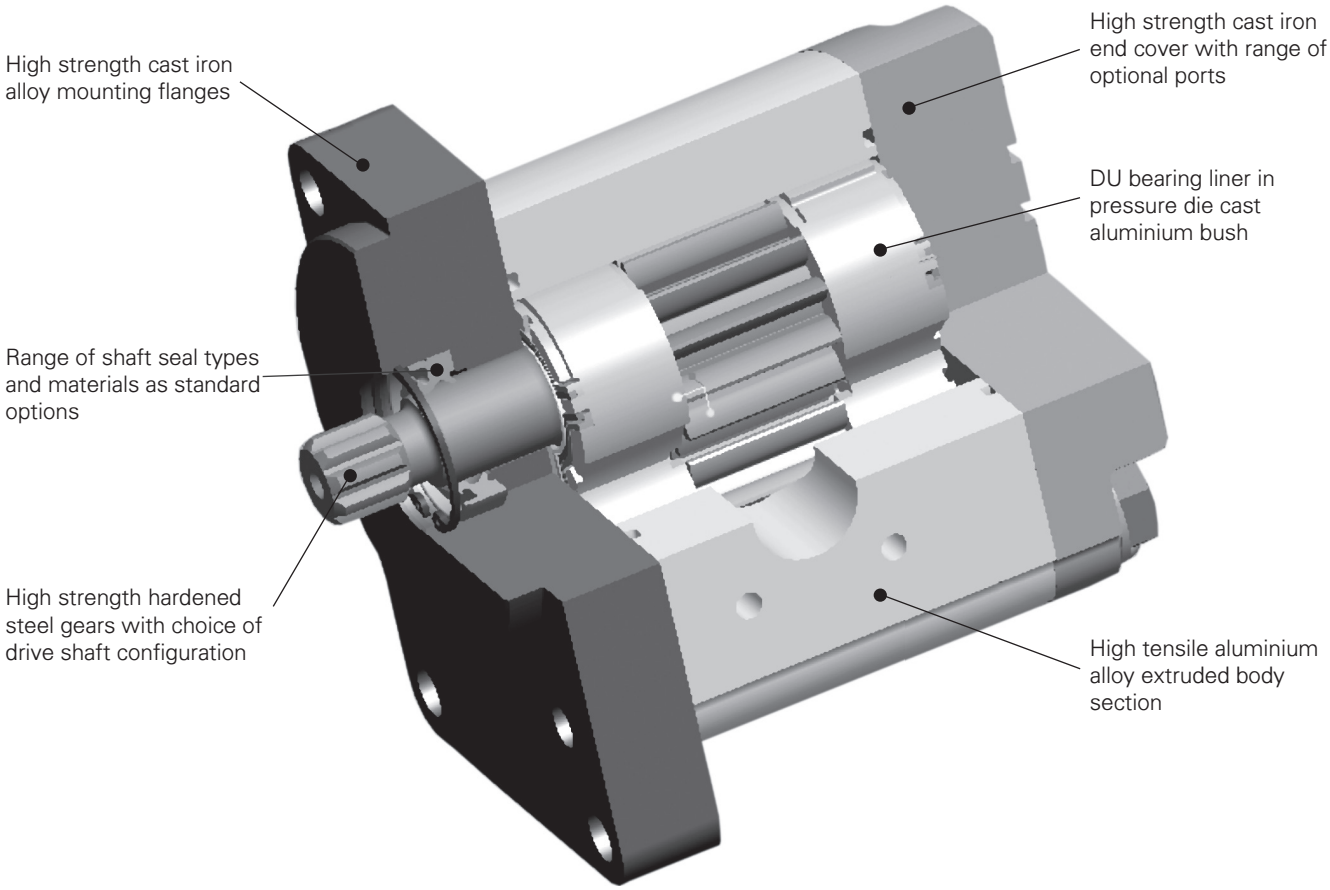

MOTOR DATA

PERFORMANCE

High duty journal bearings are essential for motors and pumps delivering levels of performance attained by Dynamatic pumps and motors. PTFE/lead (DU) plain bearings are used throughout to sustain high journal loads when operating at pressures of 250 bar and speeds of 300-3500 rev/min.

The dry run properties of DU bearings are particularly valuable during initial start-up conditions and contribute to the motors high staring torque performance. To complement these bearings, Dynamitic has developed special journal surface finishes and treatments to obtain the maximum benefits from this bearings configuration.

A 12 teeth configuration was chosen for the pumps and motors as this gave an optimum performance against physical size relationship. The motor has an excellent low speed rating combined with a high starting torque and low output torque ripple. In pump form, the use of 12 teeth gives the benefit of lower fluid borne noise and hence a quieter hydraulic system together with lower tooth contact stresses promoting a longer working life.

DURABILITY

High tensile aluminium alloy extruded bodies are used throughout the range to ensure uniformity in material properties and maximum fatigue strength. Through body bores enable precise alignment of the bearings and hence maximum bearing load capacity. Careful attention to detail machining and surface promotes an extended operating life.

Dynamitic pumps and motors units have been designed to perform with a wide range of fluids and can be supplied with nitrile and viton seals as standard.

PERFORMANCE DATA

Pump Type	Theoretical Displacement	Maximum Continuous Pressure P1		Speed at Pressure P1 Rev/Min		Typical Maximum Running Torque at Pressure P1	
	cm3/rev	bar	psi	Min	Max	Nm	lbf.ft
1DR006	5.98	250	3625	300	3500	20.6	15.2
1DR009	9.00	250	3625	300	3500	31.7	23.4
1DR012	12.01	250	3625	300	3500	43.3	31.9
1DR015	15.02	250	3625	300	3500	54.4	40.1
1DR017	17.02	230	3335	300	3500	56.9	42.0
1DR019	19.03	210	3045	300	3500	58.5	43.2
1DR022	22.02	180	2610	300	3500	58.6	43.2
1DR027	27.03	145	2105	300	3500	58.8	43.4

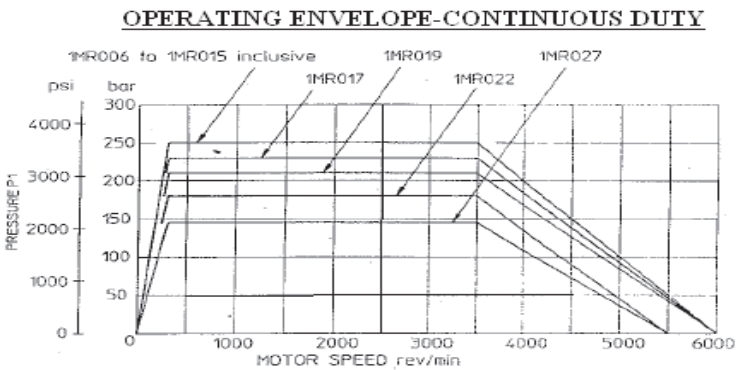

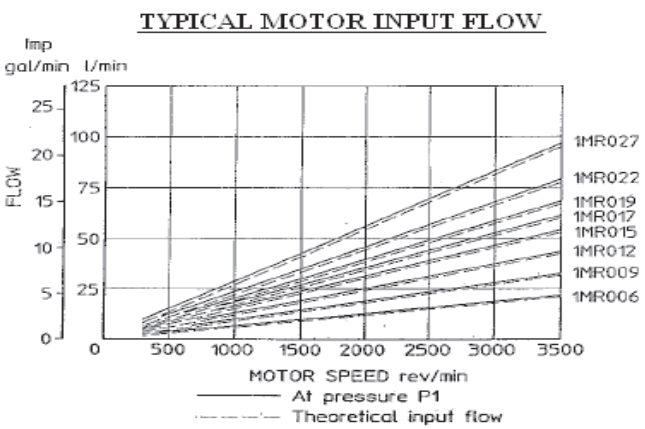

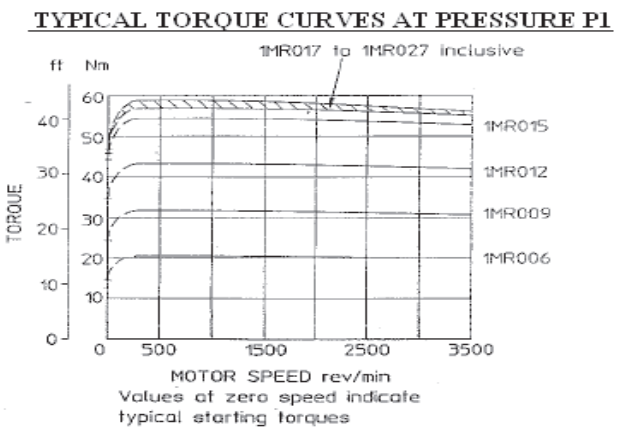

MOTOR BASIC DIMENSIONS

Motor shown :- code 1DR019 TDTXN, ref only

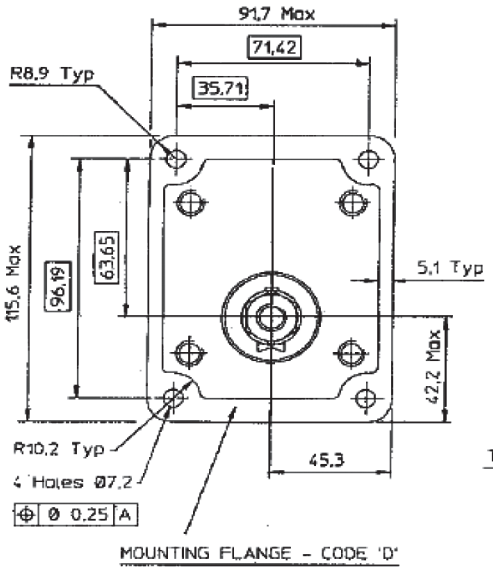

Geometric tolerence symbols to BS 308

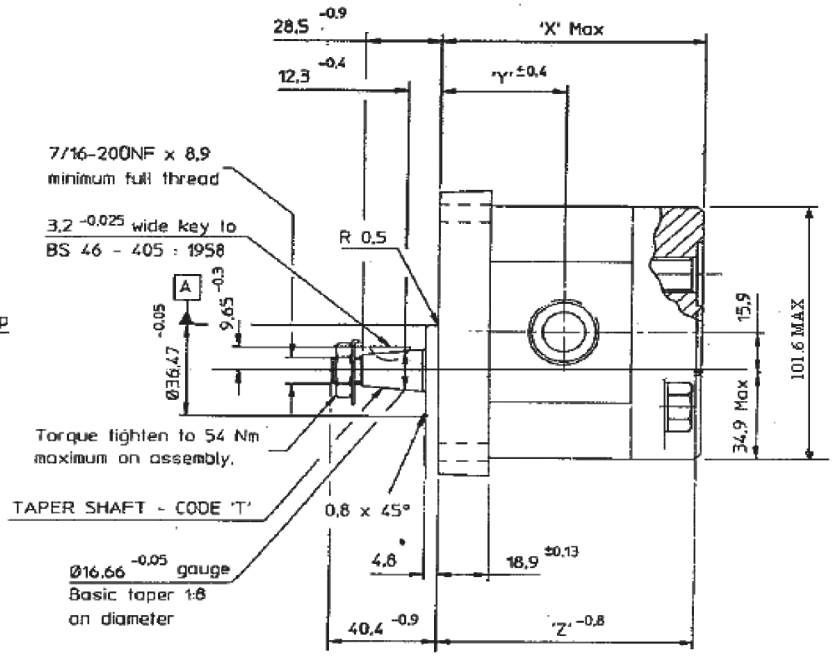

Metric body ports - Code'E'

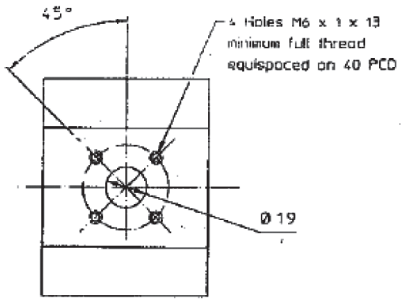

Ports are identical both sides

SAE 'O' Ring body ports- Code 'J'

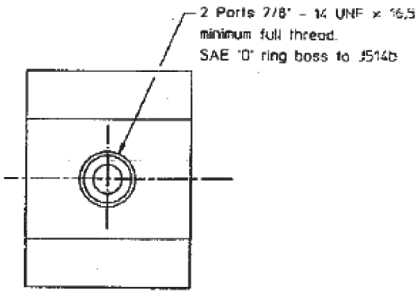

Ports are identical both sides

Body ports-Code 'F'

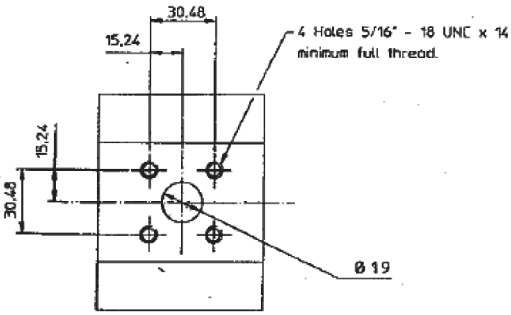

BSPF Body ports -Code 'T'

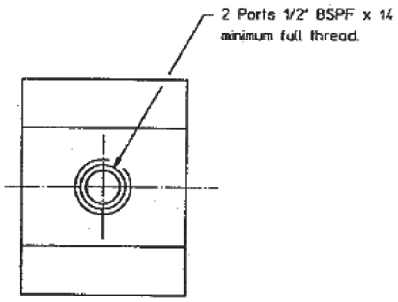

ALL DIMENSIONS ARE IN mm UNLESS OTHERWISE SPECIFIED

MOTOR DATA

FLOW SIZE	DIMENSIONS			APPROX. WEIGHT
	X	Y	Z	
006	44.1	96.1	94.8	2.3
009	46.4	100.9	99.6	2.4
012	48.8	105.6	104.3	2.5
015	51.1	110.3	109.0	2.7
017	52.7	113.5	112.2	2.8
019	54.2	116.6	115.3	2.9
022	56.6	121.3	120.0	3.0
027	60.6	129.2	127.9	3.2

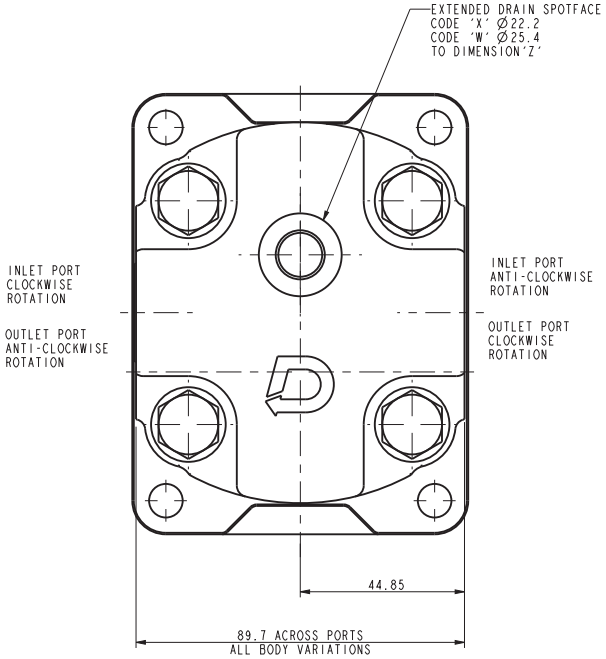

COVER CODE	END COVER			
	PORTS	MIN FULL THREAD	DRAIN	MIN FULL THREAD
W	NONE	N/A	9/16-18 UNF	14
X	NONE	N/A	¼ BSPF	12.7
Y	NONE	N/A	INTERNAL	N/A
Z	NONE	N/A	NONE	N/A
Q	7/8-14 UNF	16.5	9/16-18 UNF	14.0
R	½ BSPF	15.2	1/4BSPF	12.7
S	7/8-14 UNF	16.5	INTERNAL	N/A
T	½ BSPF	15.2	INTERNAL	N/A
U	7/8-14 UNF	16.5	N/A	N/A
V	BSPF	15.2	N/A	N/A

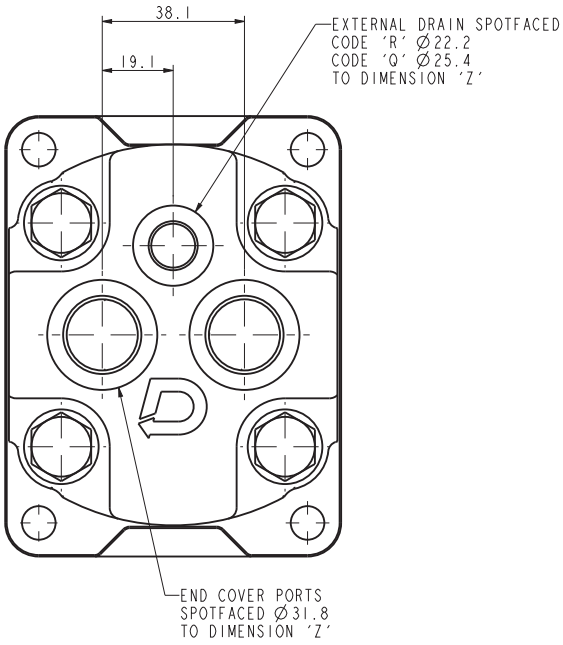

MOUNTING FLANGE CODE - S

SAE 'A' 2 BOLT

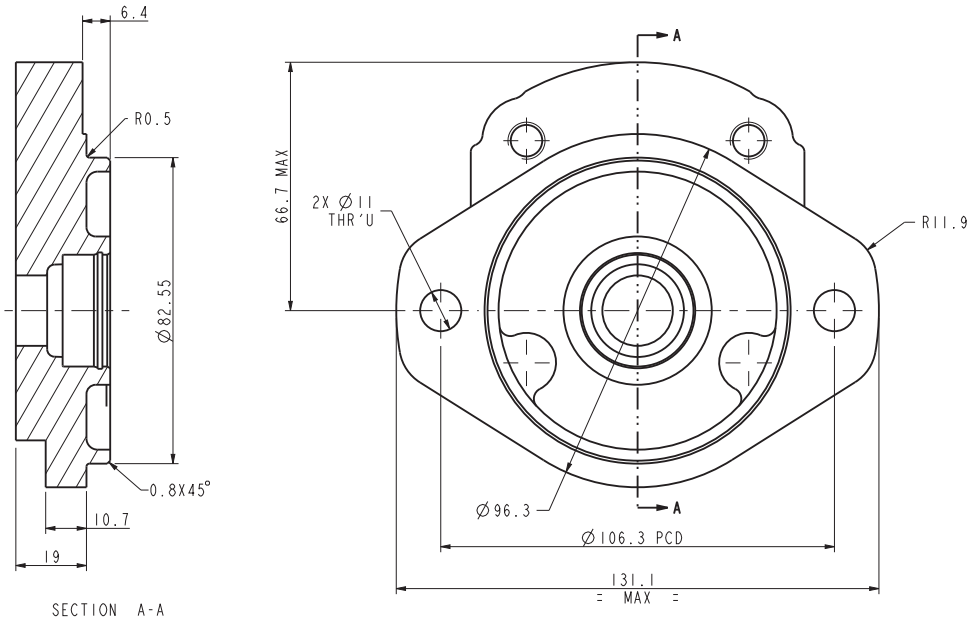

SPLINDED SHAFT CODE - S

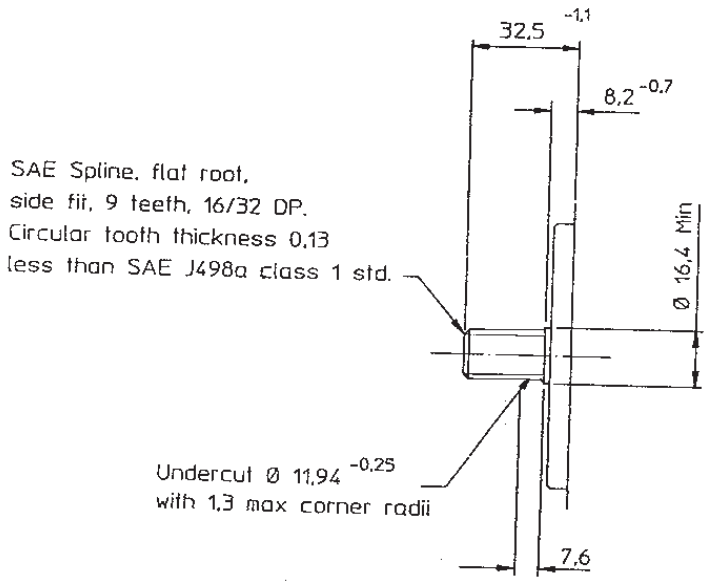

ALL DIMENSIONS ARE IN mm UNLESS OTHERWISE SPECIFIED

PARALLEL SHAFT CODE - 'L' - SAE 'A'

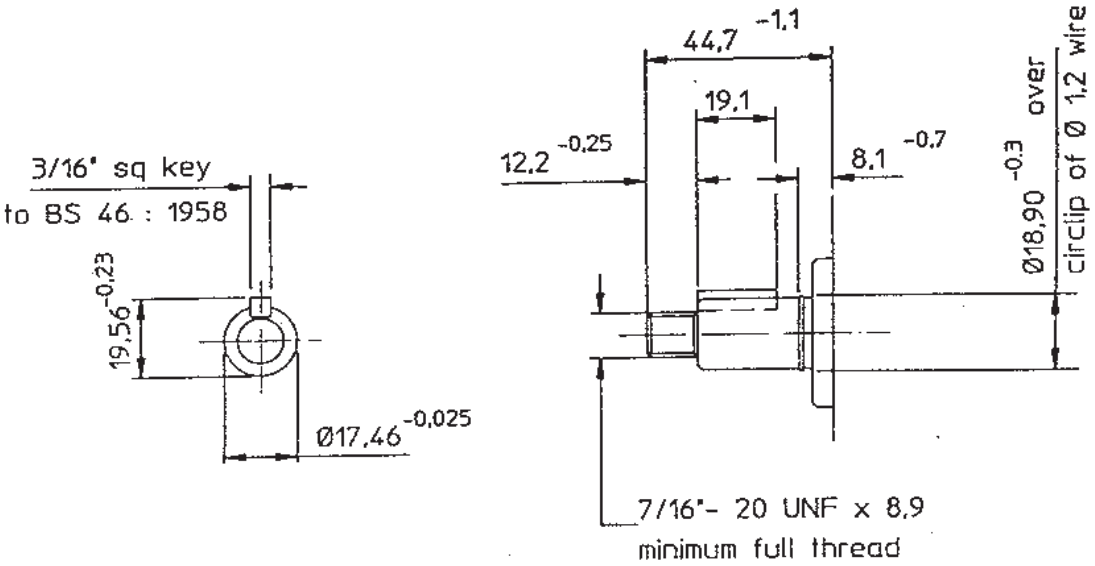

PARALLEL SHAFT CODE - 'L' - SAE 'A'

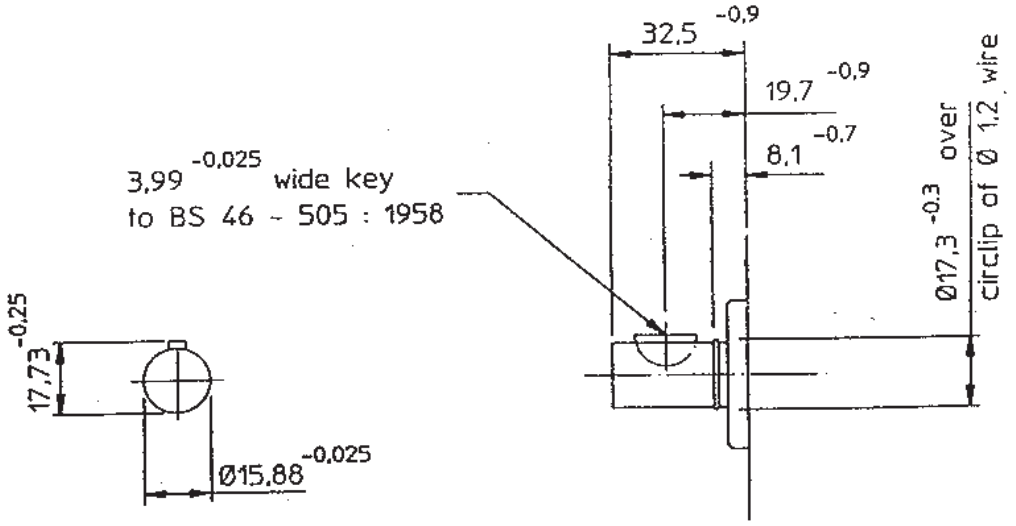

ALL DIMENSIONS ARE IN mm UNLESS OTHERWISE SPECIFIED

PORTS

Dynamatic motors can be supplied with side or end cover ports and reversible motors need a separate drain line, although where pressure levels do not exceed the pressure rating of the shaft seal, integral chuck valves can be specified . see coding chart for full details.

OPERATING TEMPERATURE

The table below gives permissible operating temperature ranges to various shaft seal type

SHAFT SEAL CODES	OPERATING TEMPERATURE	
	CONTINUOUS	INTERMITTENT
E,M & N	0°C to 80°C	-20°C to 100°C
V & W	0°C to 100°C	-20°C to 120°C

MOTOR RETURN LINE

Back pressure in motor return lines must not exceed the rating of the shaft seal. For full detail of availability of shaft seal options and pressure rating see coding chart.

SERIES OPTION

Motors can be connected in series in which case the separate end port drain line must be used.

EXTERNAL DRAIN

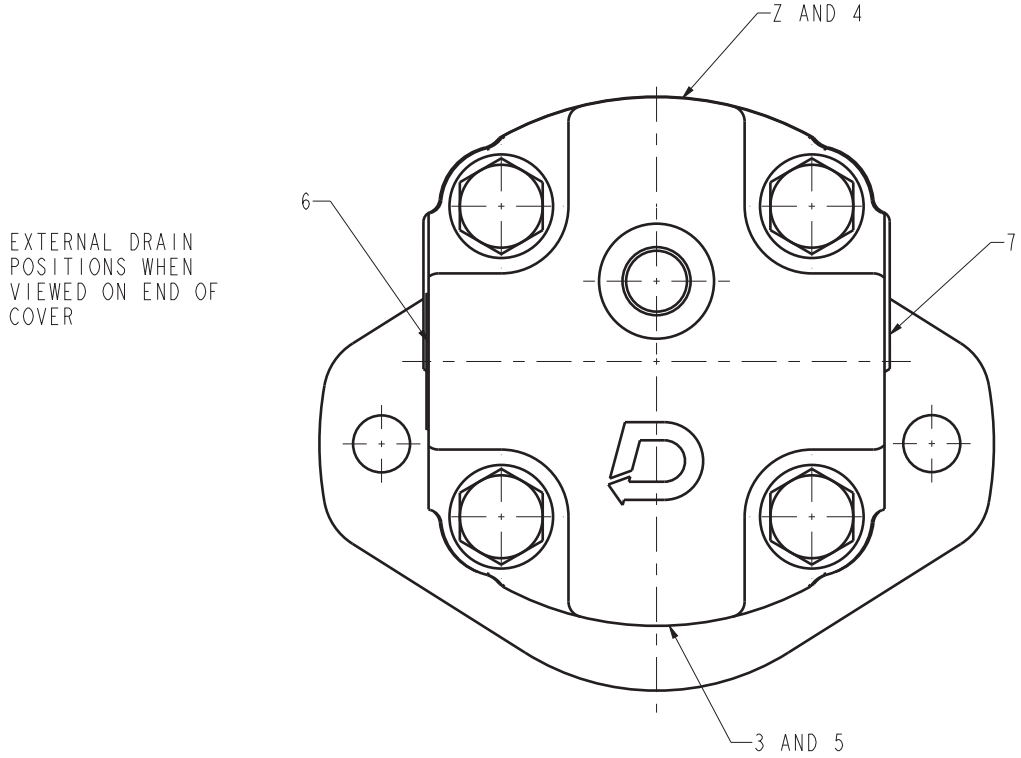

CODE	TYPE DESCRIPTION
A	¼ ”-18 NPTF
B	INTERNAL DRAIN
C	¼ ” BSPF
D	7/16”-20 UN SAE ‘O’ RING
E	9/16”-18 UN SAE ‘O’ RING
F	¼ ” BSPF ‘O’ RING
G	M12x1.5 ‘O’ RING

CODE	POSITION DESCRIPTION
1	END FACE TOP OR INTN DRAIN
2	SIDE FACE TOP
3	SIDE FACE BOTTOM
4	SIDE FACE TOP 2 JOURNALS
5	SIDE FACE BOTTOM 2 JOURNALS
6	SIDE FACE LEFT HAND SIDE
7	SIDE FACE RIGHT HAND SIDE

EXTERNAL DRAIN POSITION WHEN VIEWED ON END OF COVER

CODING CHART

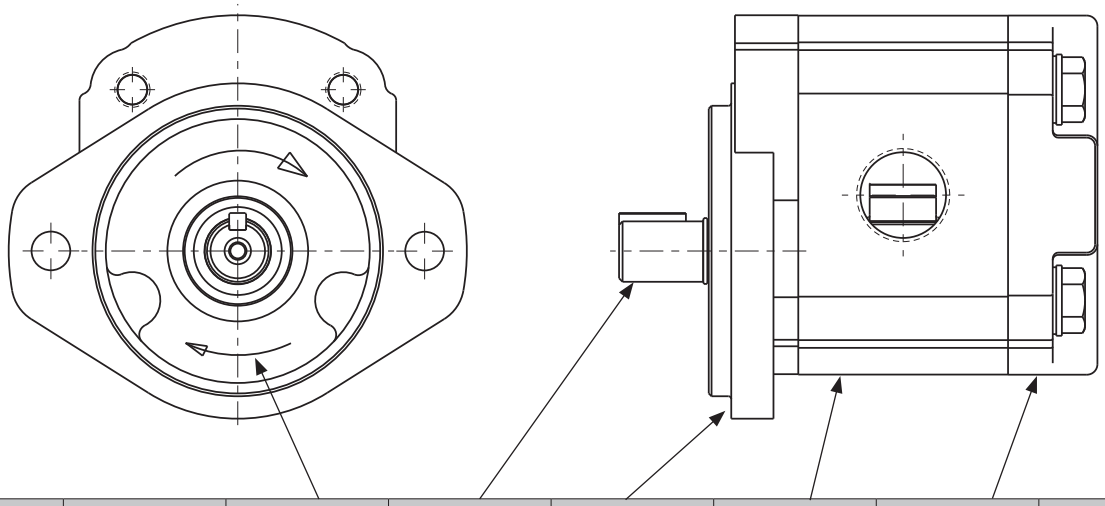

FRAME	FIOW	ROTATION	SHAFT	FLANGE	BODY	COVER	SHAFT SEAL
1DX							

FIOW SIZE CODE
006
009
012
015
017
019
022
027

SHAFT CODE
T TAPERED
P PARALLEL
S SAE 'A'SIZE STD SPLINE
L SAE 'A' SIZE PARALLEL

FLANGE CODE
D 4 BOLT MOUNTING
S SAE 'A' SIZE (2 BOLT)

ROTATION CODE
A ANTICLOCKWISE
C CLOCKWISE
R REVERSIBLE

BODY CODE
F DOWTY PORTS
J SAE 'O' RING PORTS
T BSP PORTS
E METRIC PORTS
B NO PORTS

CODE COVER	DESCRIPTION		ROTATION
	PORTS	DRAIN	
W	NONE	SAE 'O' RING	R
X	NONE	BSP	R
Y	NONE	INTERNAL	A OR C
Z	NONE	NONE	R
Q	SAE 'O' RING	SAE 'O' RING	R
R	BSP	BSP	R
S	SAE 'O' RING	INTERNAL	A OR C
T	BSP	INTERNAL	A OR C
U	SAE 'O' RING	NONE	R
V	BSP	NONE	R

SHAFT SEAL CODE
N : SINGLE NITRILE
V : SINGLE VITON
E : DOUBLE NITRILE
W : DOUBLE VITON
M : MEDIUM PRESSURE NITRILE

ALL DIMENSIONS ARE IN mm UNLESS OTHERWISE SPECIFIED

EXAMPLE OF ORDERING CODE

FRAME SIZE	FLOW SIZE	ROTATION	SHAFT	FLANGE	BODY	COVER	SHAFT SEAL
1DR	022	R	S	D	T	Z	M

This order code specifies a 1DR022 gear motor of -22.02cm3/rev capacity.

Reversible rotation

S.A.E 'A' size splined shaft

'D' Flange

BSP ported body

Non Ported end cover, without Drain.

Medium Pressure shaft seal

SHAFT SEAL DATA							
SHAFT SEAL CODE		PUMP				MOTOR	
		N	V	E	W	N	M
MAXIMUM PRESSURE AT SHAFT SEAL							
CONTINUOUS		1 bar				5	10
INTERMITTENT		1.5 bar				10	17
TEMPERATURE RANGE 0°C							
NORMAL	MINIMUM	0	0	0	0	0	0
	MAXIMUM	80	100	80	100	80	100
INTERMITTENT	MINIMUM	-20	-20	-20	-20	-20	-20
	MAXIMUM	100	120	100	120	100	100

ALL DIMENSIONS ARE IN mm UNLESS OTHERWISE SPECIFIED

This page has been intentionally left blank

HAND PUMP

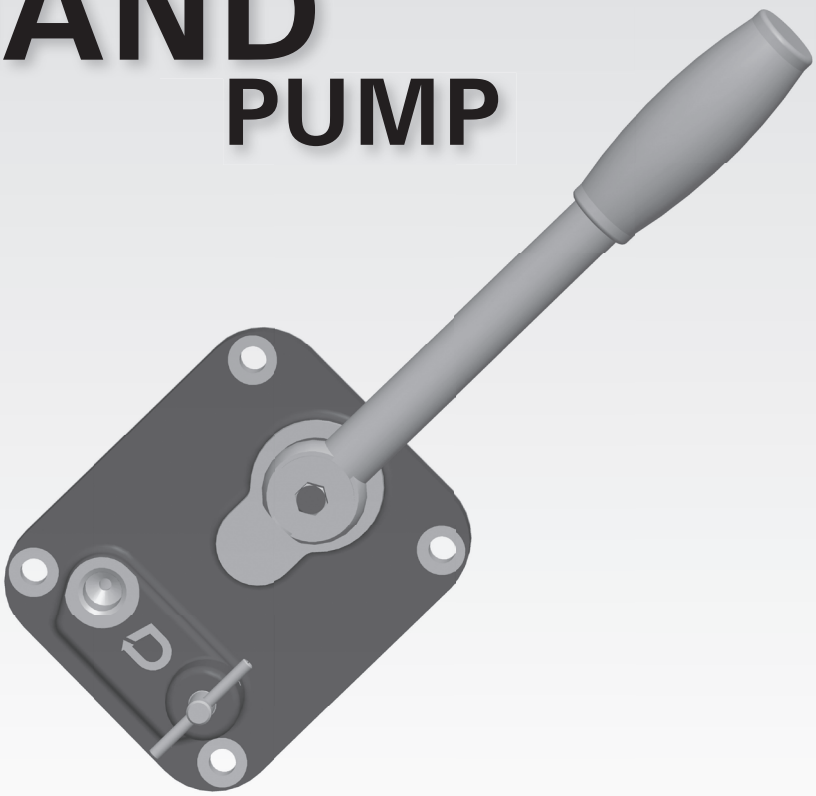

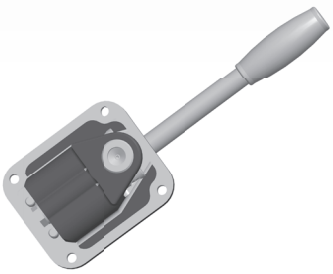

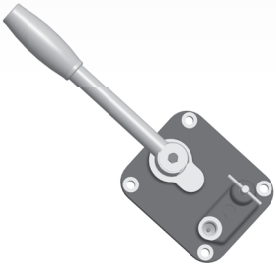

INSTALLATION DIMENSIONS

HAND PUMP WITH RESERVOIR

ALL DIMNS. ARE IN MM. UNLESS SPECIFIED

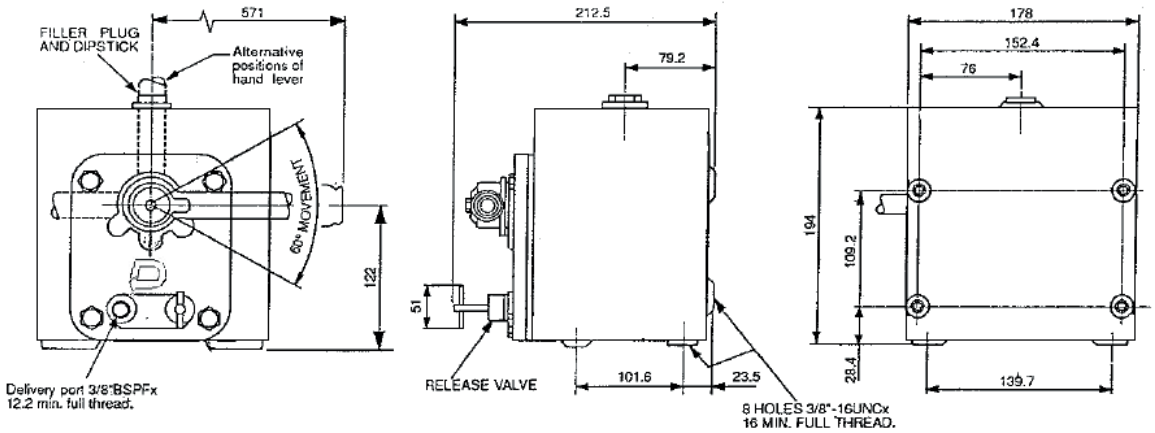

HAND PUMP WITHOUT RESERVOIR

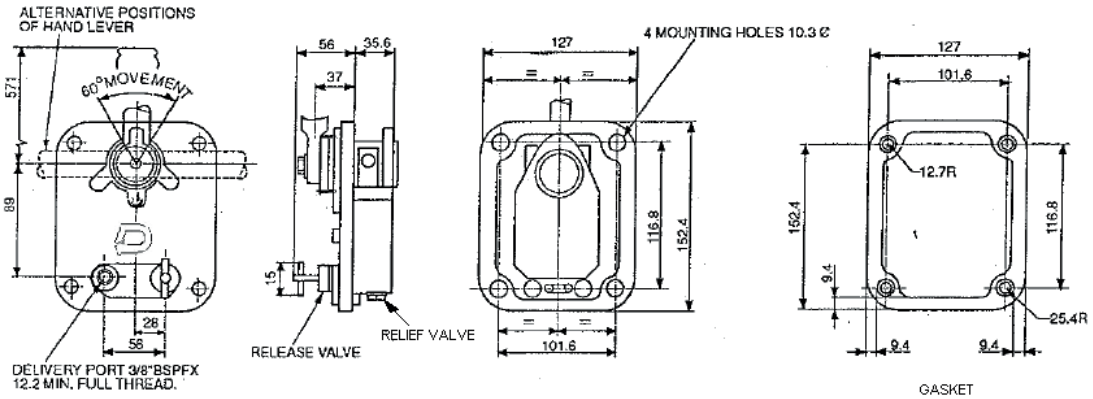

INSTALLATION NOTE :

UNITS MUST BE INSTALLED IN THE POSITION SHOWN, THAT IS, IN THE VERTICAL POSITION WITH THE HANDLE PIVOT ABOVE THE DELIVERY PORT.

OPERATIONAL DATA.

DELIVERY	0 80 in^3 (1 3 cm^3) PER DOUBLE STROKE
HAND LOAD	MAX. Pressure : 50 lb at 3000 psi 23 Kg at 200 bar
RESERVOIR CAPACITY	6 PINTS (3.4 litres)
WEIGHT APPROX.	14 lb (6.4 kg)
APPLICATION	Suitable for use with most mineral based hydraulic fluids of minimum viscosity 50 ssu

MINERAL OILS RECOMMENDED FOR USE WITH DYNAMATIC GEAR PUMPS

VISCOSITY GRADE (cst @ 40 deg c)	32-46	68	100
SAE GRADE	10W RANGE	20, 20W RANGE	HEAVIER GRADES
CASTROL	Hyspin AWS 32	Hyspin AWS 68	Hyspin AWS 100
	Hyspin AWS 46	Hyspin AWH 68	Hyspin AWH 100
	Hyspin AWH 32	Hyspin VG 68	Hyspin VG 100
	Hyspin AWH 46		
	Hyspin VG 32		
	Hyspin VG 46		
	Deusol CRI 10	Deusol CRI 20	Deusol CRI 30
	Deusol CRH 10	Deusol CRH 20	Deusol CRH 30
	Castrol CRI 10	Castrol CHI 20	Castrol CRI 30
	Castrol CRB 10	Castrol CRB 20	Castrol CRB 30
	Deusol RX Super 10W	Deusol RX Super 20	Deusol RX Super 30
	Deusol RX Super 15W/40		
	Deusol CRX 10W/40		
	Castrol CRX 10W/40		
	Castrolite Castrol GTX		
	Agricastrol Multi 10W/30	Agricastrol Multi 20W/30	
	Agricastrol 10	Agricastrol 20	Agricastrol 30
	Agricastrol HDD 10	Agricastrol HDD 20	Agricastrol HDD 30
	Agricastrol ATF		
	Deusol TFA Dexron II		
	Castrol TQ Dexron II		
	Deusol TFM 33	Deusol Multiplant	Deusol TFC 330
	Castrol TQF	Alpha SP 68	Alpha SP 100
	Deusol TFC 310	Alpha ZN 68	Alpha ZN 100
ELF	Albatross 34	Albatross 73	
AGIP	Albatross 55		
	OSO 35	OSO 55	OSO 75
MOBIL	DTE 24, DTE 25, DTE 13	DTE 26, DTE 16	DTE 18, DTE 19
	DTE 15		
	DTE Oil Light	DTE Oil Heavy Medium	DTE Oil Heavy
	DTE Oil Medium		
	Vacuoline Oil 1405	Vacuoline Oil 1409	
	Super 10W/40	Mobil Super 15W/40	
	Super 10W/50	Mobil Super 15W/50	
	Delvac Special 10W/30	Delvac Special 20W/50	
	Delvac 1210	Delvac Super	
	Delvac 1310	Delvac 1220	Delvac 1230
	Monil ATF 200	Delvac 1320	Delvac 1240
	Monil ATF 210	Mobilfluid 98	Mobilfluid 422
	Monil ATF 220	Mobilfluid 316	
	Mobifluid 423	Mobiland Universal	
		Mobiland Super	

CONTAMINATION CHART

STANDARD		NUMBER OF PARTICLES PER 100 ML				
NAS 1638	ISO 4406	MICRON RANGE μm				
CONT. LEVEL		5 to 15	15 to 25	25 to 50	50 to 100	> 100
00	8/5	125	22	4	1	-
0	9/6	250	44	8	2	-
1	10/7	500	88	16	3	1
2	11/8	1000	178	32	6	1
3	12/9	2000	356	63	11	2
4	13/10	4000	712	126	22	4
5	14/11	8000	1425	253	45	8
6	15/12	16000	2800	506	90	16
7	16/13	32000	5700	1012	180	32
8	17/14	64000	11400	2000	360	64
9	18/15	128000	22800	4100	720	128
10	19/16	256000	45600	8100	1440	256
11	20/17	512000	91200	16200	2800	512
12	21/18	1000000	182000	32400	5800	1024

Dynamatic recommends, the oil should be filtered during top-up and continuously during operation, to achieve and maintain a minimum cleanliness level of ISO 17/14.

QUESTIONNAIRE - SINGLE PUMP

1	Customer					
2	Pump Model					
3	Flow (lpm) / Displacement (cc/rev)					
4	Application					
5	Rated rpm					
6	Working Pressure (bar)					
7	Working Pressure Peak (bar)					
8	Oil used					
9	Viscosity (cSt)					
10	Reservoir Capacity (ltrs)					
11	Oil Temperature (°C)					
12	Filtration(Suction/any other)					
13	Suction Head(Vacuum)					
14	Cavitation(if any)					
15	Direction of Rotation					
16	Type of shaft					
17	Length of Shaft from the flange surface in mm					
18	Drive Mechanism					
19	Power takeoff from gear box/Crankshaft/Camshaft/ Driveshaft/Universal joint					
20	Whether bearing support required					
21	Mounting flange Details					
22	Suction Port details					
23	Delivery port details					
24	Type of Piping					
25	Space restriction (if any)					
26	Remarks/ Suggestions					
27	Annual requirements					

QUESTIONNAIRE - TANDEM PUMP

1	Customer					
2	Pump Model					
3	Flow (lpm) / Displacement (cc/rev) Front Pump					
	Rear pump					
4	Application					
5	Rated rpm	Min		Max		
6	Working Pressure (bar) Front Pump	Min		Max		
	Rear Pump	Min		Max		
7	Working Pressure Peak (bar)					
8	Oil used					
9	Viscosity (cSt)					
10	Reservoir Capacity (ltrs)					
11	Oil Temperature (°C)					
12	Filtration (Suction/any other)					
13	Suction Head (Vacuum)					
14	Cavitation (if any)					
15	Direction of Rotation					
16	Type of shaft					
17	Length of Shaft from the flange surface in mm					
18	Drive Mechanism					
19	Power takeoff from gear box/Crankshaft/Camshaft/ Driveshaft/Universal joint					
20	Whether bearing support required					
21	Mounting flange Details					
22	Suction Port details Front Pump					
	Rear pump					
23	Delivery port details Front Pump					
	Rear pump					
24	Type of Piping					
25	Space restriction (if any)					
26	Remarks/ Suggestions					
27	Annual Requirement					